8	7	6	5	4	3	2	NEXT ASS'Y	1 FINAL ASS'Y

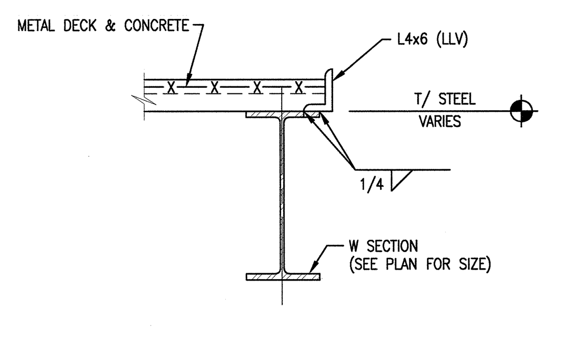

20 SECTION THRU EDGE OF SLAB
S2.04.42 SCALE : 3/4"=1'-0" SSC032-5A

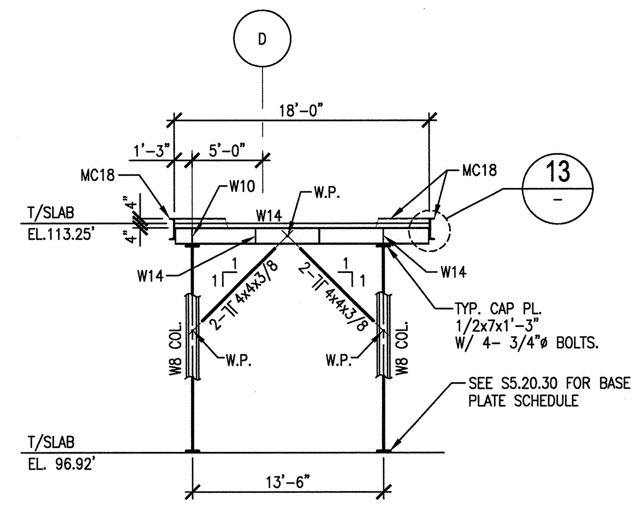

NOTES:
1). ALL GUSSET PL'S. SHALL BE 3/8" THICK.

14 SECTION THRU MEZZANINE
S2.02.43 SCALE : 1/8"=1'-0" SDT051011-5A

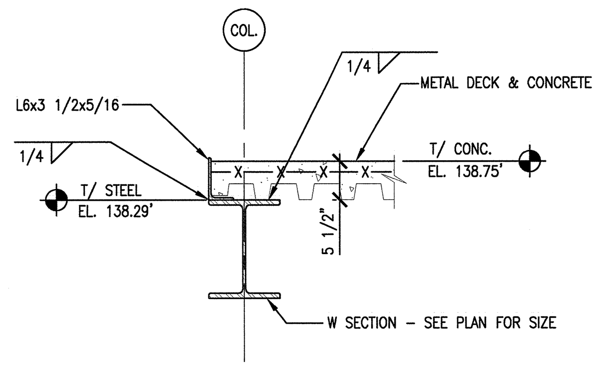

21 SECTION THRU EDGE OF SLAB
S2.04.41 SCALE : 3/4"=1'-0" SSC032-5A
S2.04.44
S2.04.45

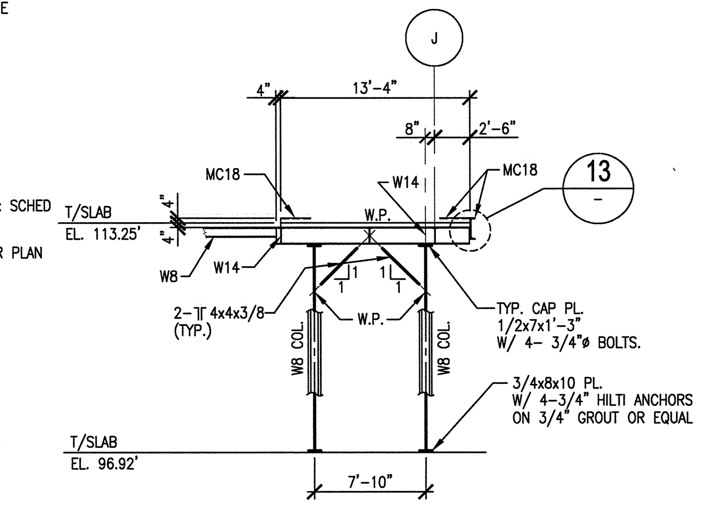

NOTES:
1). ALL GUSSET PL'S. SHALL BE 3/8" THICK.

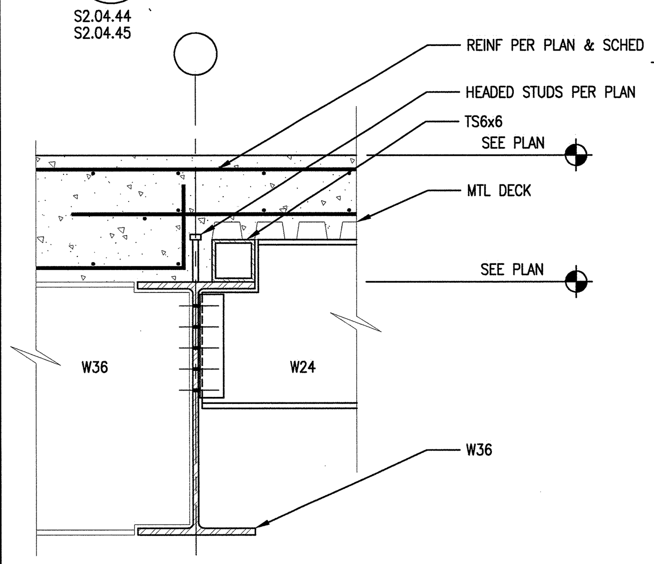

22 SECTION AT SLAB TRANSITION
S2.03.48 SCALE : 3/4"=1'-0" SSC032-5A

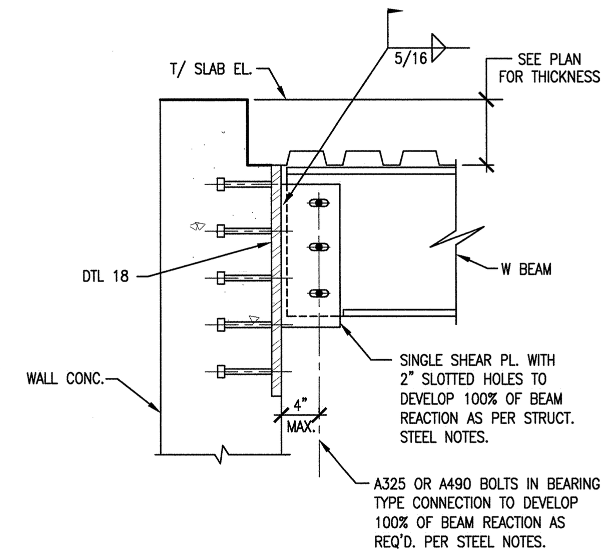

10 TYPICAL EMBEDDED PLATE
S2.02.41 SCALE: 1"=1'-0" SDT051001-5A

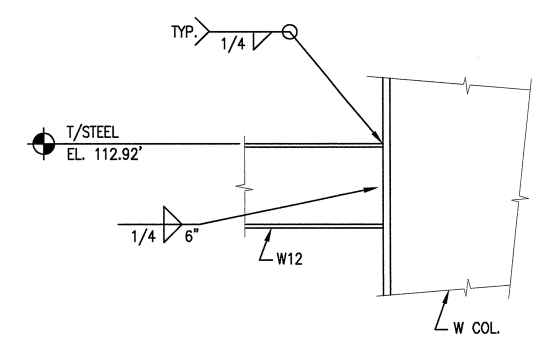

11 TYPICAL DETAIL
S5.10.34 SCALE: 3/4"=1'-0" SDT051008-5A

12 NOT USED
– SCALE: x"=x'-x"

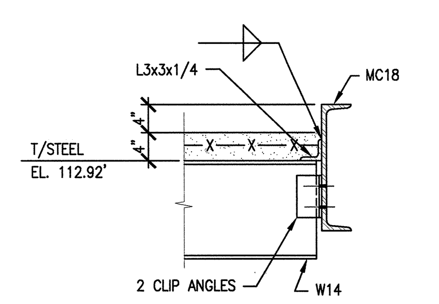

13 TYPICAL DETAIL
S5.10.34 SCALE: 3/4"=1'-0" SDT051008-5A
S2.02.44
S2.02.46
S2.02.47
S2.02.49
S5.10.35

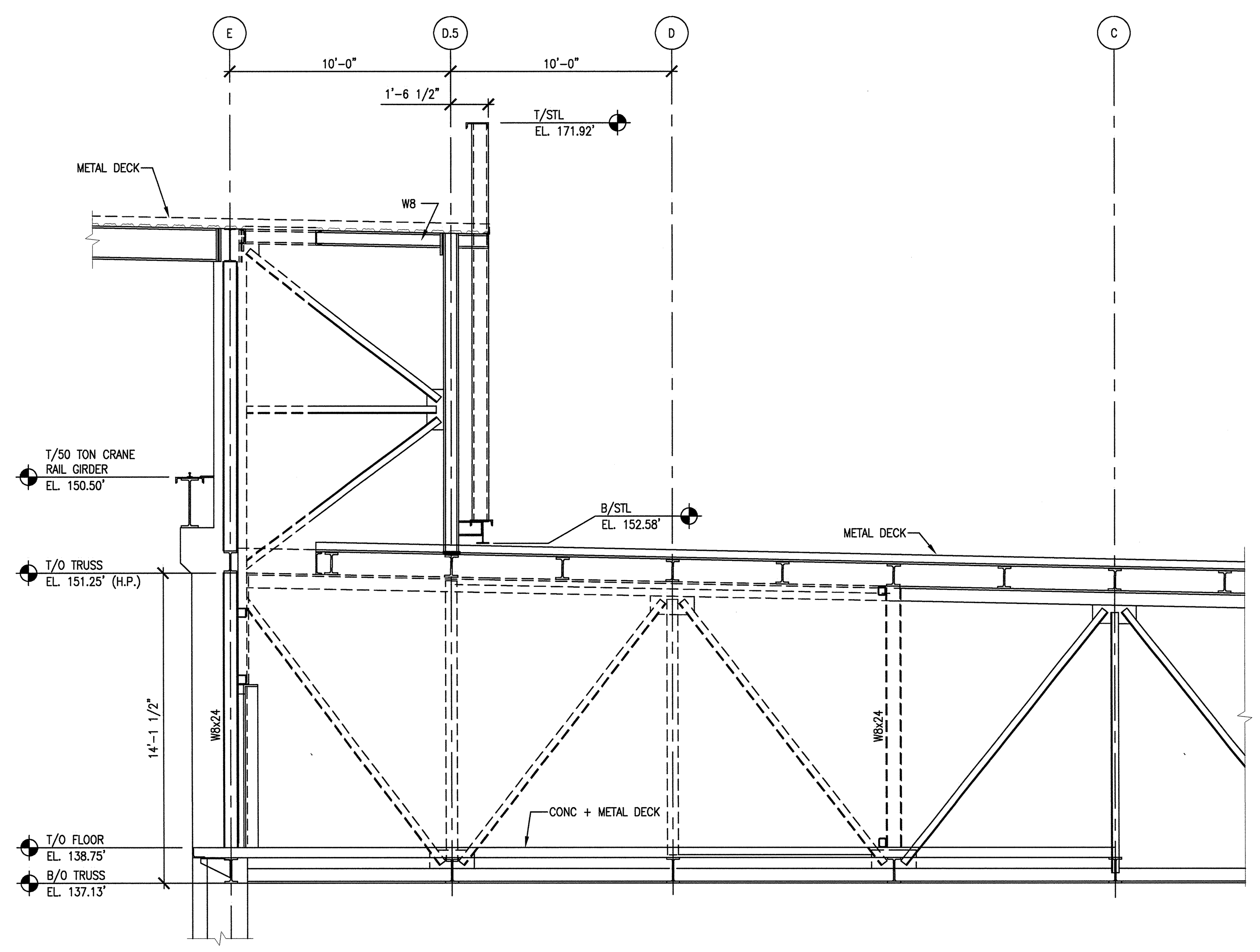

2 SECTION THRU HYDROGEN UTILITY ROOM (HUR)
S2.04.43 SCALE : 1/4"=1'-0" SSC013-5A

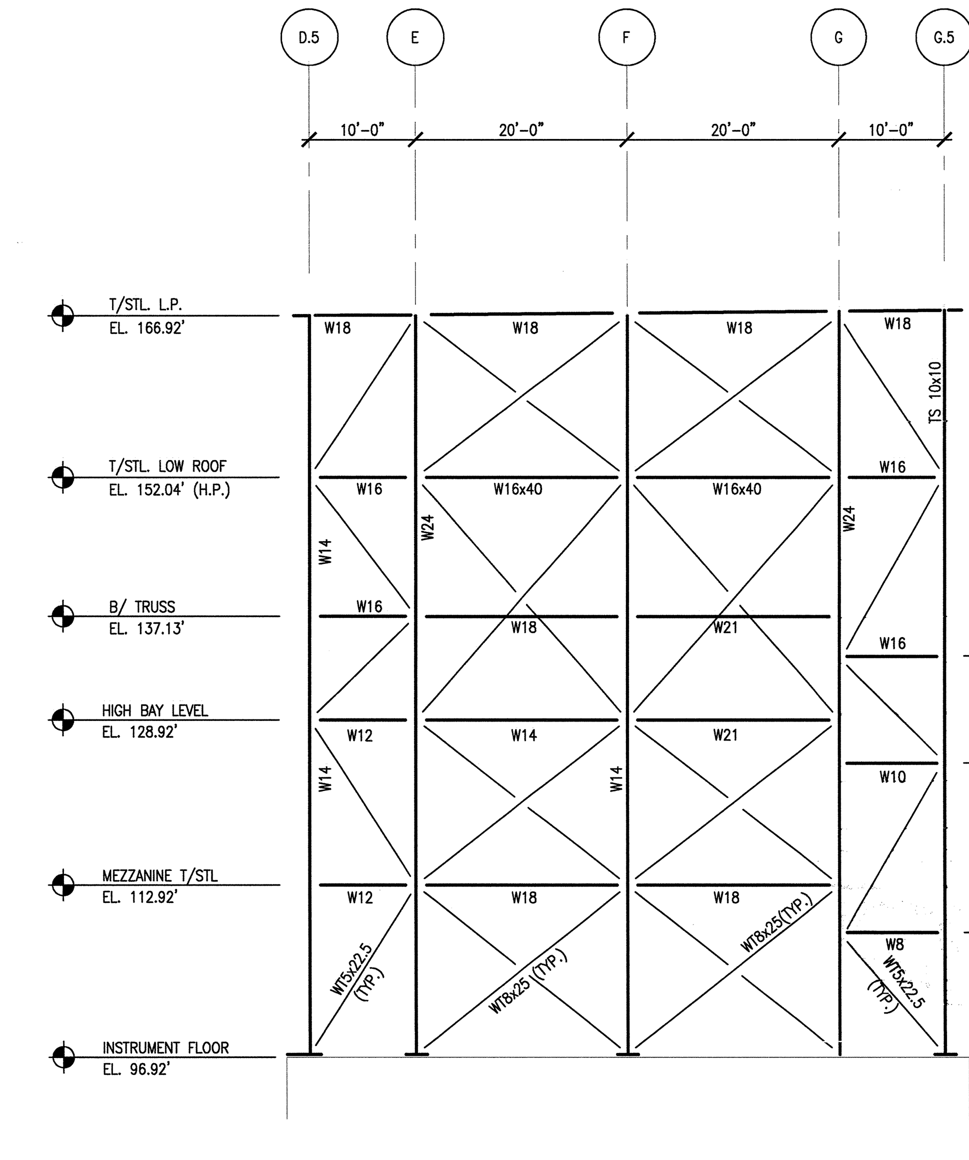

1 ELEVATION AT COL. LINE 16 (LOOKING WEST)
S5.10.35 SCALE: 3/32"=1'-0" SEL004-5A

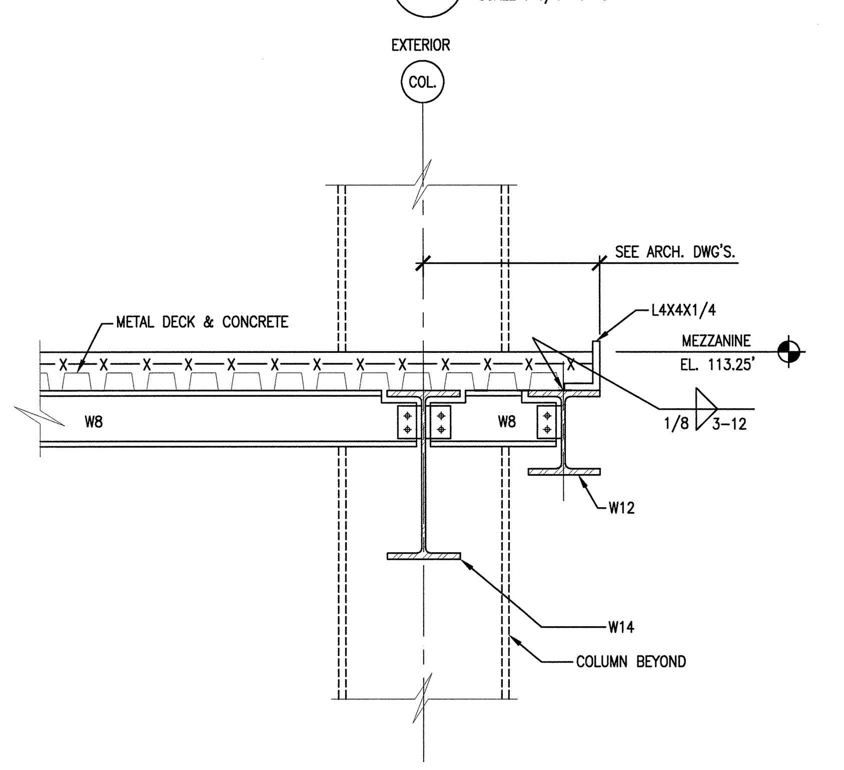

8 SECTION THRU MEZZANINE @EXTERIOR
S2.02.41 SCALE : 3/4"=1'-0" SSC032-5A
S2.02.43
S2.02.44
S2.02.46
S2.02.47
S2.02.49

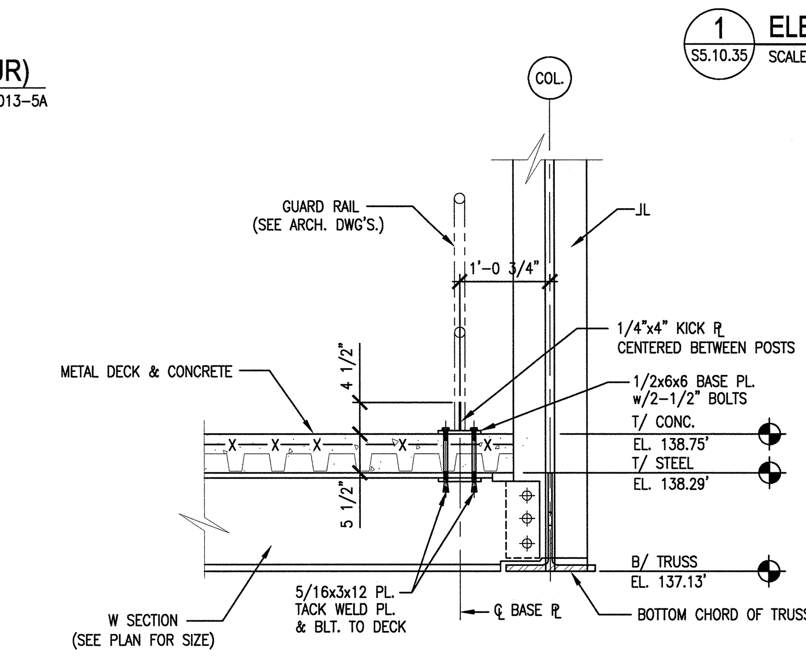

5 SECTION THRU EDGE OF SLAB
S2.04.41 SCALE : 3/4"=1'-0" SSC032-5A
S2.04.43
S2.04.44
S2.04.46
S2.04.47
S2.04.49

3 NOT USED

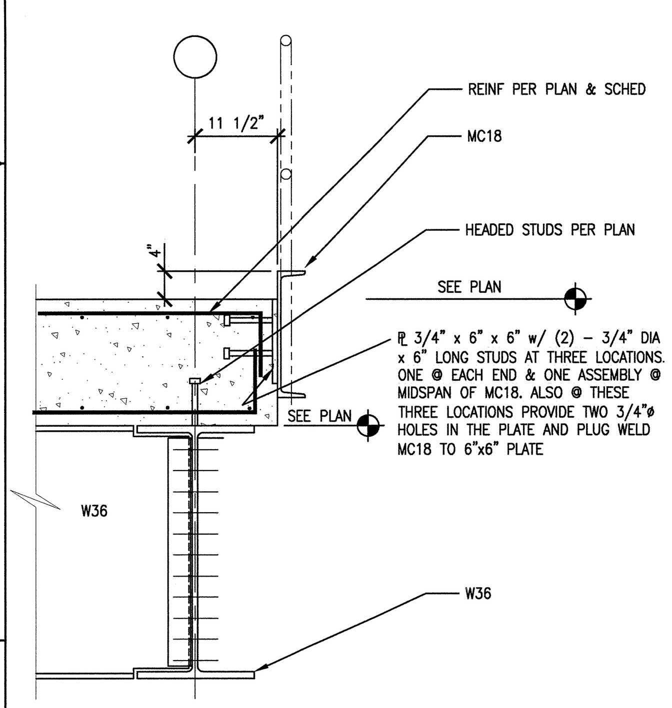

23 SECTION AT SLAB EDGE
S2.03.48 SCALE : 3/4"=1'-0" SSC032-5A

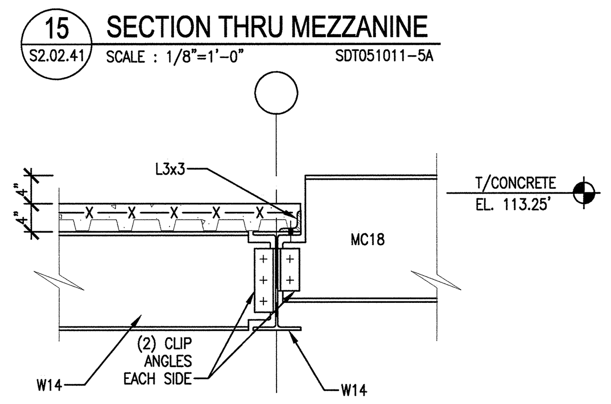

15 SECTION THRU MEZZANINE
S2.02.41 SCALE : 1/8"=1'-0" SDT051011-5A

16 SECTION THRU MEZZANINE
SCALE : 3/4"=1'-0" SSC032-5A

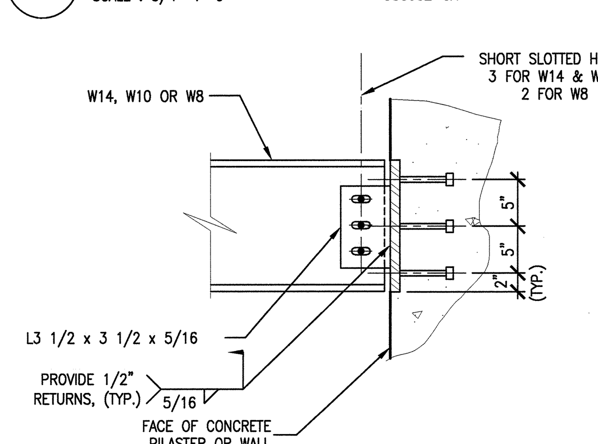

EMBEDDED PLATE & ANCHOR STUDS
1.) W14, PROVIDE PL 1/2" x 12" x 1'-2" WITH 6-1/2"ø x 6" ANCHOR STUDS IN 2 ROWS.
2.) W10, PROVIDE PL 1/2" x 9" x 0'-10" WITH 4-1/2"øx6" ANCHOR STUDS IN 2 ROWS.
3.) W8, PROVIDE PL 1/2" x 6" x 0'-9" WITH 2-1/2"ø x 6" ANCHOR STUDS IN 1 ROW.

18 TYPICAL DETAIL
S2.02.43 SCALE: 1"=1'-0" SDT051001-5A
S2.02.45

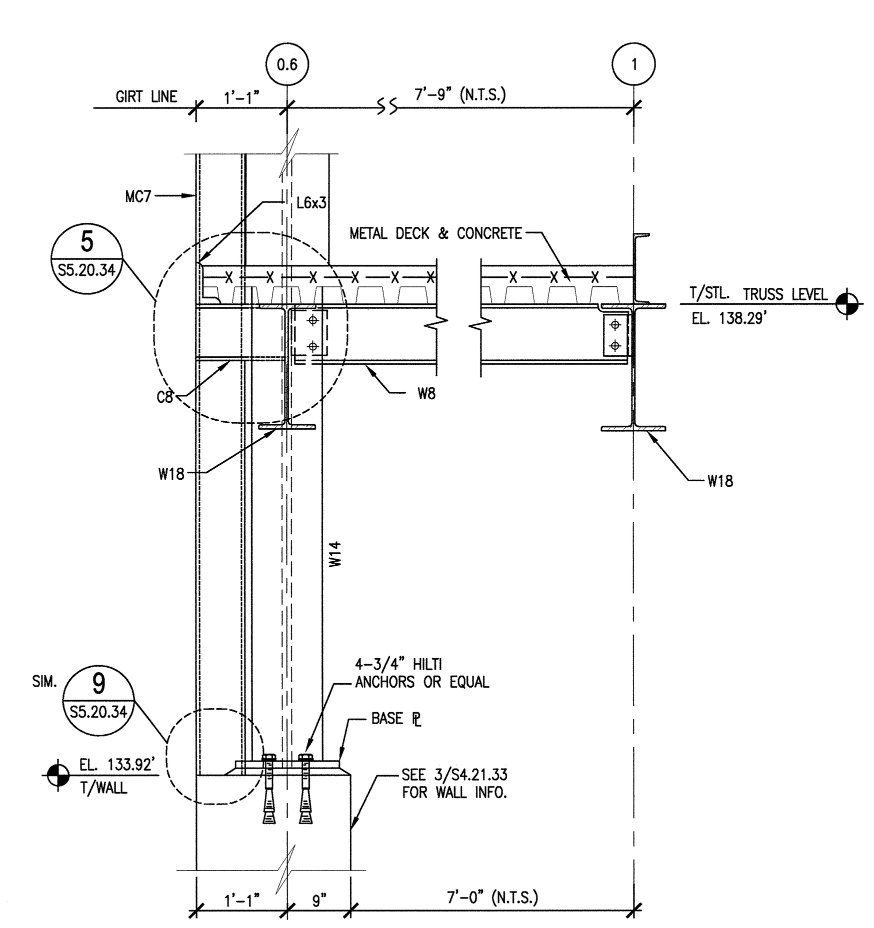

17 SECTION THRU TRUSS LEVEL @ COL. LINE "F"
S2.02.42 SCALE : 3/4"=1'-0" SSC032-5A

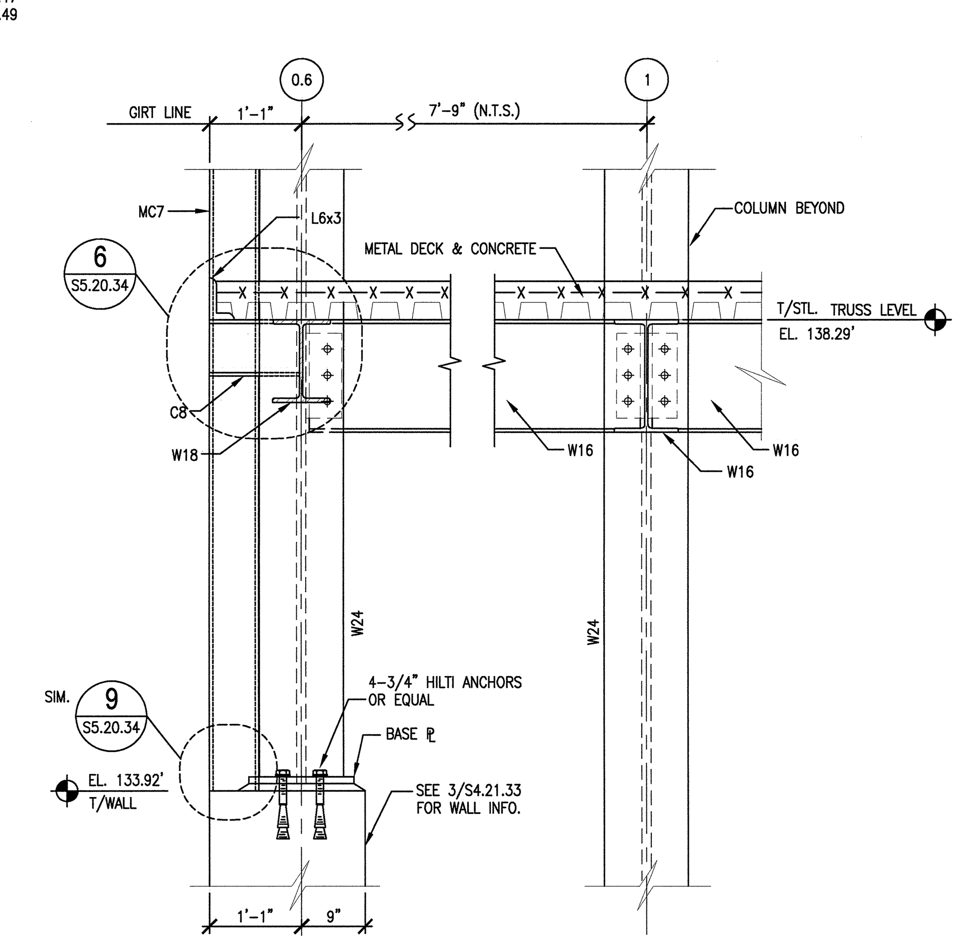

9 SECTION THRU TRUSS LEVEL @ COL. LINE "G"
S2.04.41 SCALE : 3/4"=1'-0" SSC032-5A
S2.04.42

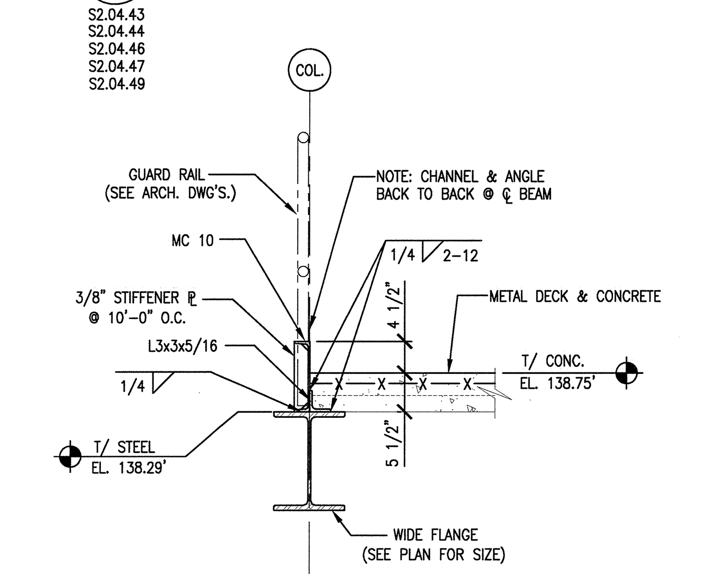

6 SECTION THRU EDGE OF SLAB
S2.04.41 SCALE : 3/4"=1'-0" SSC032-5A
S2.04.43 S2.04.46
S2.04.44 S2.04.49

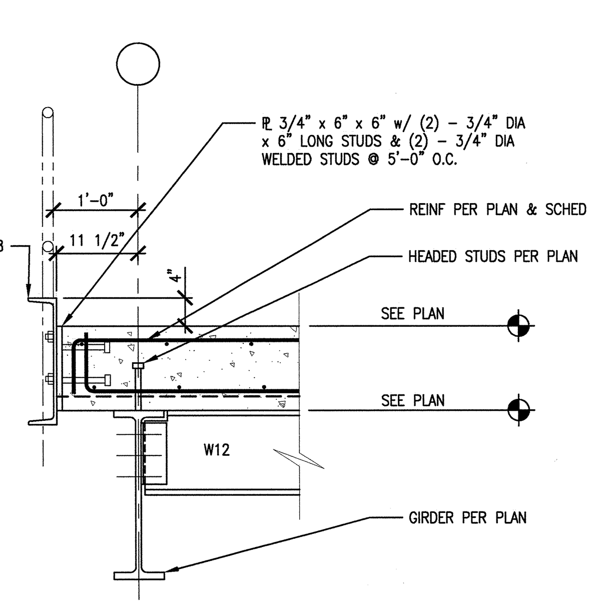

24 SECTION THRU EDGE OF SLAB
S5.10.35 SCALE : 3/4"=1'-0" SSC032-5A
S2.03.48

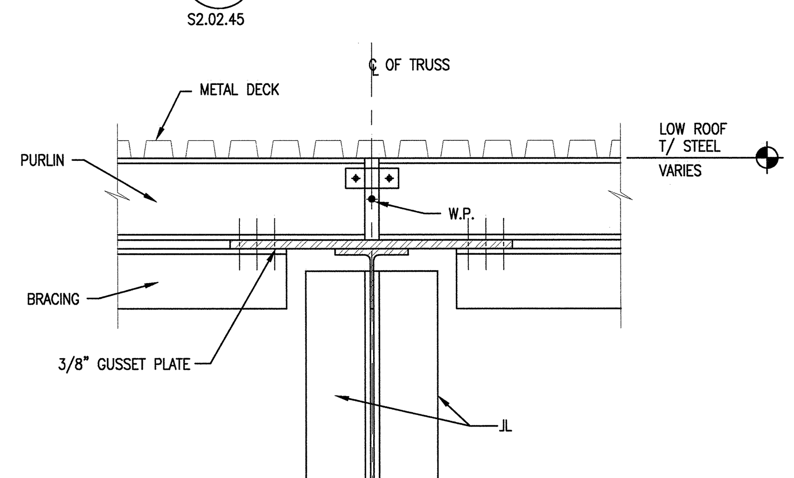

19 TYPICAL TOP CHORD BRACING CONNECTION DETAIL
S5.10.32 SCALE : 3/4"=1'-0" SSC032-5A

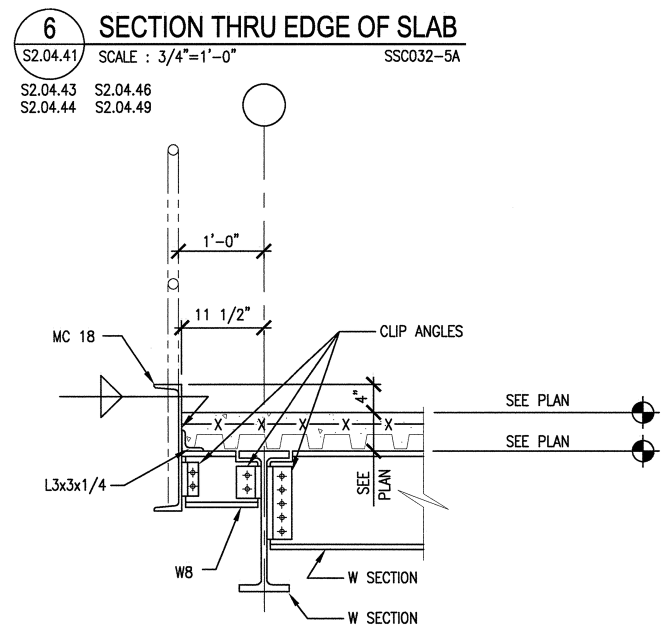

7 SECTION THRU EDGE OF SLAB
S2.03.48 SCALE : 3/4"=1'-0" SSC032-5A
S2.02.47 S2.04.48
S2.02.49

4 NOT USED

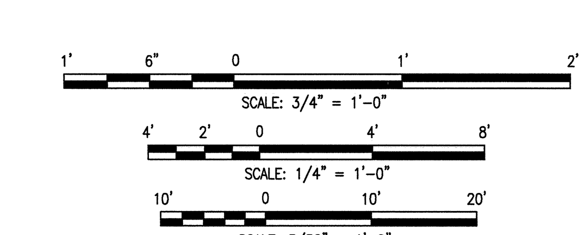

NO REPRESENTATION OR WARRANTY, EXPRESSED OR IMPLIED, IS MADE AS TO THE ACCURACY, COMPLETENESS OR USEFULNESS OF THE INFORMATION OR STATEMENTS CONTAINED IN THESE DRAWINGS, OR THAT THE USE OR DISCLOSURE OF ANY INFORMATION, APPARATUS, METHOD, OR PROCESS DISCLOSED IN THESE DRAWINGS MAY NOT INFRINGE PRIVATE RIGHTS OF OTHERS. NO LIABILITY IS ASSUMED WITH RESPECT TO THE USE OF, OR FOR DAMAGES RESULTING FROM THE USE OF ANY INFORMATION, APPARATUS, METHOD, OR PROCESS DISCLOSED IN THESE DRAWINGS. DRAWINGS MADE AVAILABLE FOR INFORMATION TO BIDDER ARE NOT TO BE USED FOR OTHER PURPOSES AND ARE TO BE RETURNED UPON REQUEST OF THE FORWARDING CONTRACTOR.

NUMBER OF SECTION OR DETAIL — DRAWING ON WHICH SECTION OR DETAIL IS SHOWN OR TAKEN
SECTION AND DETAIL KEY

THIS DOCUMENT CONTROLLED BY
CHANGE CONTROL SYSTEM 3
ENGINEERING PROCEDURE SNS-ENG-G001

REV	CHANGE TYPE	CHANGE CONTROL SYSTEM	CHANGE REQUEST NUMBER	DESCRIPTION	DSN	CHK	DEPT	DATE	PE	DATE	PJ	DATE	REQ	DATE	UTB	DATE	RPE	RPE NO	DATE	ST	CV	EC	EE	EM	IE	M	PD	SE	AR
0				CERTIFIED FOR CONSTRUCTION – 10/26/01	GPR	REW			[signature]	11/15/01	RAD	11/14/01			[signature]	11/14/01	JJB	23236	11/13/01	REW	–	WRS	AK	WRS	BWJ	–	MP	–	ED

REVISION OR ISSUE PURPOSE — REVISION APPROVALS — SQUAD CHECK

RPE: [seal: JOHN BUSCH, REGISTERED ENGINEER, AGRICULTURE, COMMERCE, NO. 23236, STATE OF TENNESSEE]
REV. 0 DATE 11/13/01

DSN	G. REDDY	10/26/01
DRW	G.MARSZALEK	10/26/01
CHK	R.WALKINGTON	10/26/01
DEPT		
PE	[signature]	11/15/01
PJ	[signature]	11/14/01
REQ		
UTB	[signature]	11/14/01

DRAWING APPROVALS

108030700-S8E-8700-A086

Knight/Jacobs Joint Venture
701 Scarboro Road, MS 8253
Oak Ridge, TN 37830
865-241-9433
fax 865-241-3400

KNIGHT
Knight Advanced Technology
549 West Randolph Street
Chicago, IL 60661

UT-BATTELLE
Oak Ridge National Laboratory
managed for the DEPARTMENT OF ENERGY under
U.S. GOVERNMENT contract DE-AC05-00OR22725
UT-BATTELLE, LLC, © Oak Ridge, Tennessee

PROJECT NAME:
SPALLATION NEUTRON SOURCE

TARGET BUILDING
STEEL ELEVATIONS AND DETAILS

1	48	49	50	PLANT	BLDG	FL	SH.	OF	TYPE	CLASS
3	S	X	X	8	8700		1	1	S	U
51	52		53		WBS					REV
NC	NA				1.8.3.7	S5.10.35				0

AutoCAD

Date: 11/13/2001 Time: 14:40:23
Username: MARSZALEKGJ
CHI-F_VOL2:PROJECTS\7000\700_CADD\TASK_5A\740_PLOT\S5-10-35.DWG