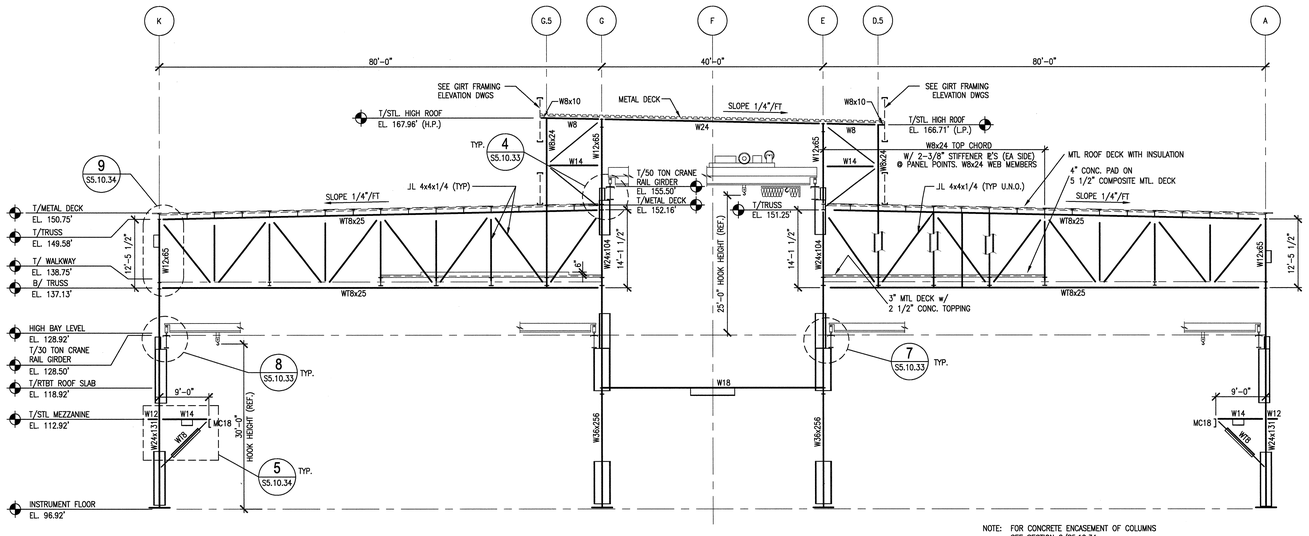

NOTE: FOR CONCRETE ENCASEMENT OF COLUMNS SEE SECTION 2/S5.10.34

1 S5.10.33 ELEVATION COL. LINE 2.5
SCALE: 3/32"=1'-0"

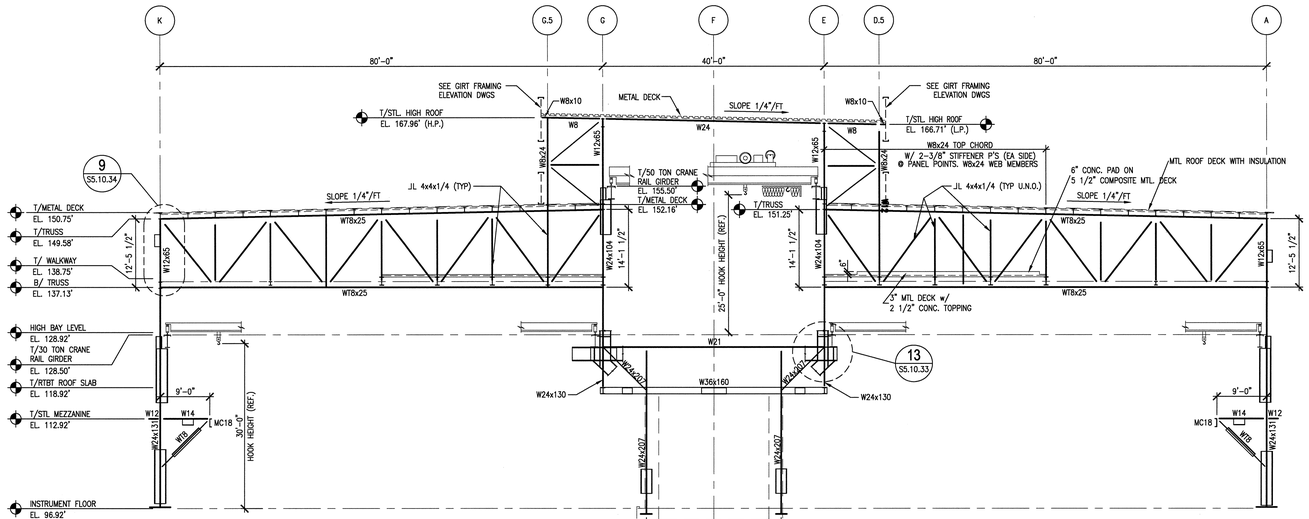

NOTE: FOR CONCRETE ENCASEMENT OF COLUMNS SEE SECTION 2/S5.10.34

2 S5.10.33 ELEVATION COL. LINE "4"
SCALE: 3/32"=1'-0"

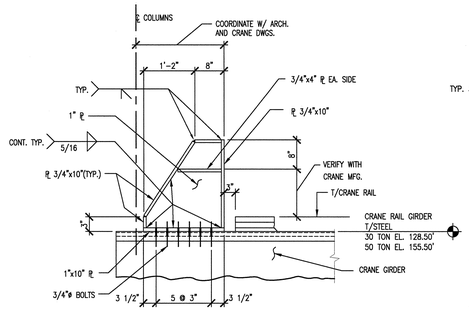

6 S5.10.33 CRANE STOP DETAIL
SCALE: 3/4"=1'-0" SDT051008-5A
S1.05.30

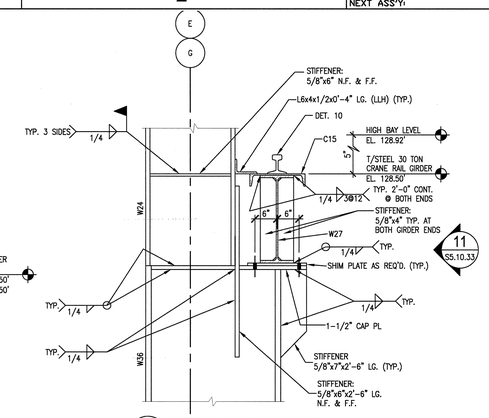

7 S5.10.33 DETAIL - 30 TON CRANE
SCALE: 3/4"=1'-0" SDT051008-5A
S5.10.34
S1.05.30

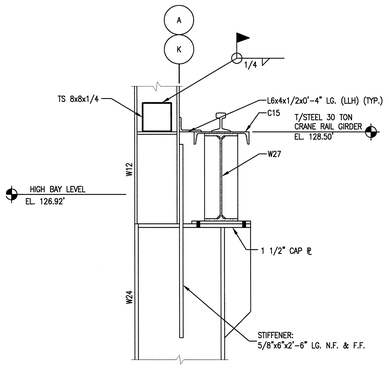

8 S5.10.33 DETAIL - 30 TON CRANE
SCALE: 3/4"=1'-0" SDT051008-5A
S5.10.34 SEE SECTION 7 FOR ADD'L. INFORMATION
S1.05.30

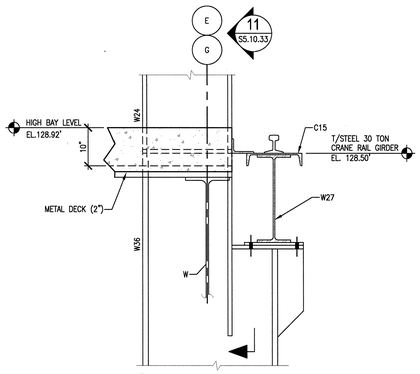

9 S5.10.33 DETAIL - 30 TON CRANE
SCALE: 3/4"=1'-0" SDT051008-5A
S5.10.34
S1.05.30

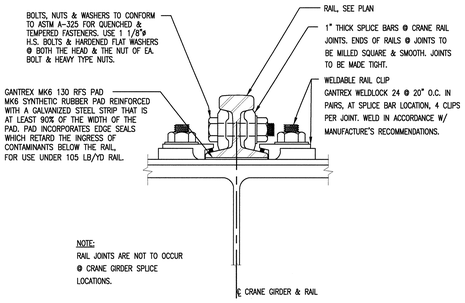

NOTE:
RAIL JOINTS ARE NOT TO OCCUR @ CRANE GIRDER SPLICE LOCATIONS.

10 S5.10.33 TYPICAL CRANE RAIL CONNECTION DETAIL
SCALE: NO SCALE SDT051008-5A

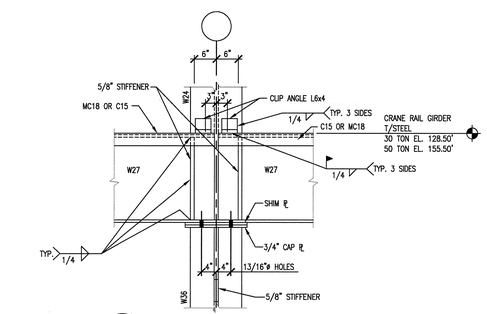

11 S5.10.33 DETAIL FOR CRANE SUPPORT
SCALE: 3/4" = 1'-0" SDT051008-5A
S5.10.31

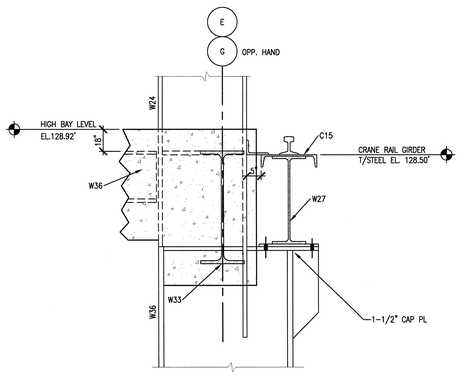

3 S5.10.33 DETAIL @ 30 TON CRANE
SCALE: 3/4"=1'-0" SDT051008-5A
S5.10.34
S1.05.30

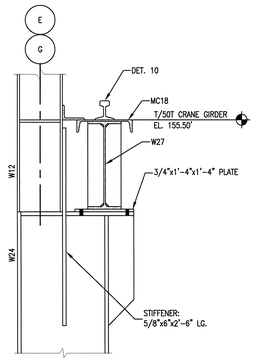

4 S5.10.33 DETAIL - 50 TON CRANE
SCALE: 3/4"=1'-0" SDT051008-5A
S5.10.34 SEE SECTION 7 FOR ADD'L. INFORMATION
S1.05.30

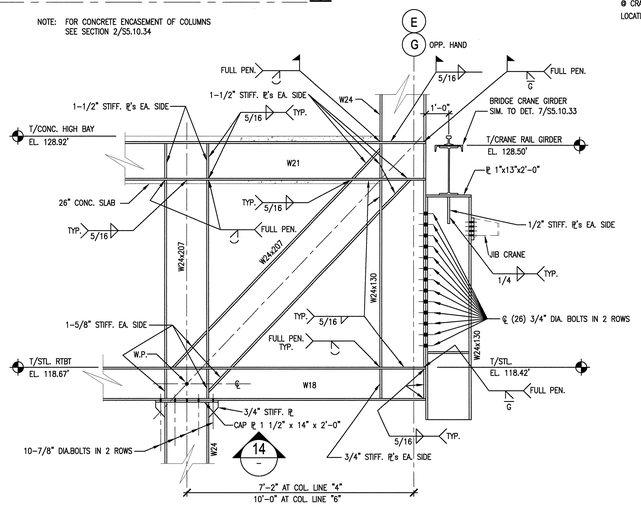

13 S5.10.33 DETAIL - 30 TON CRANE
SCALE: 3/8"=1'-0" SDT051039-5A
S5.10.34

SCALE: 3/4" = 1'-0"

SCALE: 3/32" = 1'-0"

NO REPRESENTATION OR WARRANTY, EXPRESSED OR IMPLIED, IS MADE AS TO THE ACCURACY, COMPLETENESS OR USEFULNESS OF THE INFORMATION OR STATEMENTS CONTAINED IN THESE DRAWINGS, OR THAT THE USE OR DISCLOSURE OF ANY INFORMATION, APPARATUS, METHOD, OR PROCESS DISCLOSED IN THESE DRAWINGS MAY NOT INFRINGE PRIVATE RIGHTS OF OTHERS. NO LIABILITY IS ASSUMED WITH RESPECT TO THE USE OF, OR FOR DAMAGES RESULTING FROM THE USE OF ANY INFORMATION, APPARATUS, METHOD, OR PROCESS DISCLOSED IN THESE DRAWINGS. DRAWINGS MADE AVAILABLE FOR INFORMATION TO BIDDER ARE NOT TO BE USED FOR OTHER PURPOSES AND ARE TO BE RETURNED UPON REQUEST OF THE FORWARDING CONTRACTOR.

NUMBER OF SECTION OR DETAIL
DRAWING ON WHICH SECTION OR DETAIL IS SHOWN OR TAKEN
SECTION AND DETAIL KEY

THIS DOCUMENT CONTROLLED BY
CHANGE CONTROL SYSTEM 3
ENGINEERING PROCEDURE SNS-ENG-0001

REV	CHANGE TYPE	CHANGE CONTROL SYSTEM	CHANGE REQUEST NUMBER	DESCRIPTION	DSN	CHK	DEPT
0				CERTIFIED FOR CONSTRUCTION – 10/26/01	GPR	REW	

REVISION OR ISSUE PURPOSE

DATE	PE	DATE	PJ	DATE	REQ	DATE	UTB	DATE	RPE	RPE NO	DATE
11/14/01						11/14/01	JJB	23236			11/13/01

REVISION APPROVALS

REW	–	WRS	AK	WRS	BWJ	–	MP	–	ED
ST	CV	EC	EE	EM	IE	M	PD	SE	AR

SQUAD CHECK

RPE
JOHN BUSCH REGISTERED ENGINEER AGRICULTURE COMMERCE NO. 23316 STATE OF TENNESSEE
REV. 0 DATE 11/14/01

DSN	G. REDDY	10/26/01
DRW	G.MARSZALEK	10/26/01
CHK	R.WALKINGTON	10/26/01
DEPT		
PE		11/13/01
PJ		11/14/01
REQ		
UTB		11/14/01

DRAWING APPROVALS

108030700-S8E-8700-A084

Knight Jacobs
Knight/Jacobs Joint Venture
701 Scarboro Road, MS 8253
Oak Ridge, TN 37830
865-241-9433
fax 865-241-3400

KNIGHT
Knight Advanced Technology
549 West Randolph Street
Chicago, IL 60661

UT-BATTELLE
Oak Ridge National Laboratory
managed for the DEPARTMENT OF ENERGY under U.S. GOVERNMENT contract DE-AC05-00OR22725
UT-BATTELLE, LLC. • Oak Ridge, Tennessee

PROJECT NAME:
SPALLATION NEUTRON SOURCE

TARGET BUILDING
COLUMN LINES "2", "5" AND "4"
STEEL ELEVATIONS AND DETAILS

1	48	49	50	PLANT	BLDG	FL	SH.	OF	TYPE	CLASS
3	S	X	X	8	8700		1	1	S	U
51		52		53	WBS		S5.10.33			REV
NC		NA			1.8.3.7					0

AutoCAD
Date: 11/13/2001 Time: 14:41:35
Username: BARSZALEKGJ
J:\S8_VOL2\PROJECTS\8000_SERIES\8700_SAT\R0_PLOT\S5-10-33.DWG