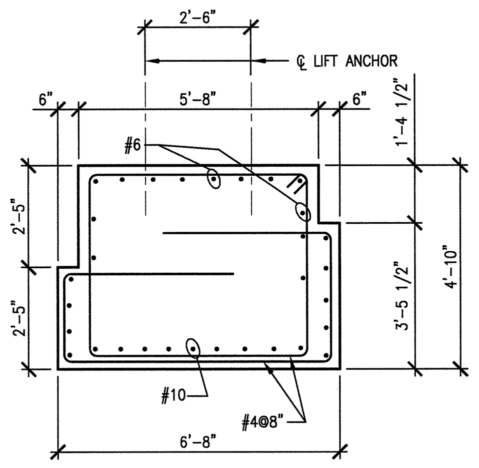

NOTE:
DIMENSIONS INDICATED ARE NOMINAL

15 / S2.03.45 **T14**
SCALE : 3/8"=1'-0" SDT03311-5A

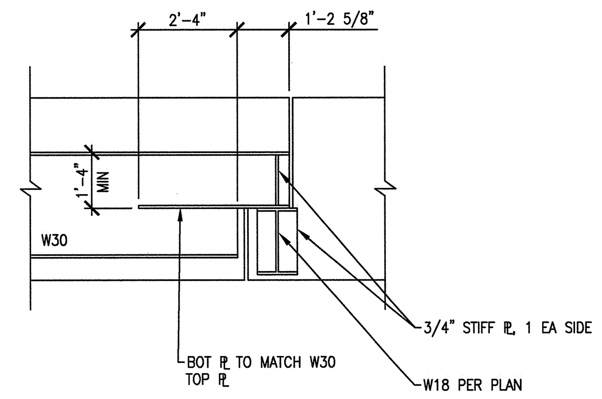

11 / S2.03.45 **SECTION**
SCALE : 3/8"=1'-0" SDT03311-5A

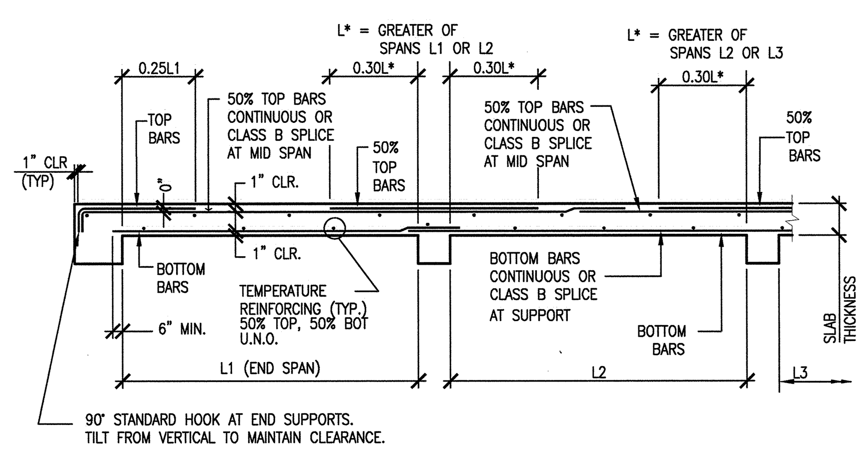

12 **TYPICAL ONE-WAY SLAB BAR PLACING DIAGRAM**
SCALE : N.T.S SDT03311-5A

SLAB SCHEDULE

MARK	THICKNESS (IN.)	BOTTOM BARS	TOP BARS LEFT SUPPORT	TOP BARS CONT. SUPPORT	TOP BARS RIGHT SUPPORT	TEMP. REINF.	REMARKS
S5	52"	#9@6"	#9@6"		#9@6"	#9@18" T&B	
S6	18"	#8@12"	#8@12"	#8@12"		#5@12" T&B	
S7	18"	#8@12"		#8@12"		#5@12" T&B	
S8	18"	#8@12"			#8@12"	#5@12" T&B	
S9	18"	#8@12"	#8@12"		#8@12"	#5@12" T&B	
S10	12"	#6@12"	#6@12"	#6@12"		#6@18" T&B	MTL DECK SLAB
S11	12"	#6@12"		#6@12"		#6@18" T&B	MTL DECK SLAB
S12	12"	#6@12"			#6@12"	#6@18" T&B	MTL DECK SLAB
S13	12"	#6@12"	#6@12"		#6@12"	#6@18" T&B	MTL DECK SLAB
S14	24"	#9@12"	#9@12"		#9@12"	#6@18" T&B	

NOTES:
1. THIS SCHEDULE IS A CONTINUATION OF SLAB SCHEDULE STARTED ON S4.30.30
2. SLABS INDICATED AS "METAL DECK SLAB" ARE CAST ON 3" DEEP 18 GA COMPOSITE DECK AND ARE ATTACHED TO SUPPORTING BEAMS W/3/4" DIA x 6" LONG HEADED STUDS @ 18" O.C. THICKNESS INDICATED INCLUDES DECK.

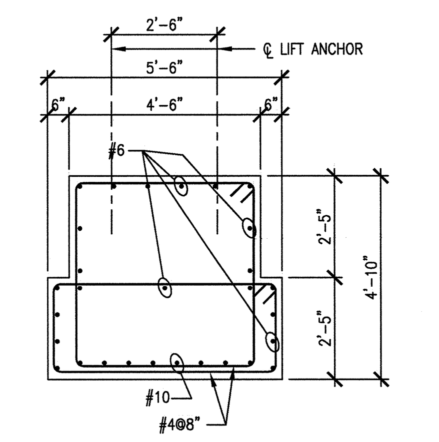

NOTE:
DIMENSIONS INDICATED ARE NOMINAL

6 / S2.03.45 **T8**
SCALE : 3/8"=1'-0" SDT03311-5A

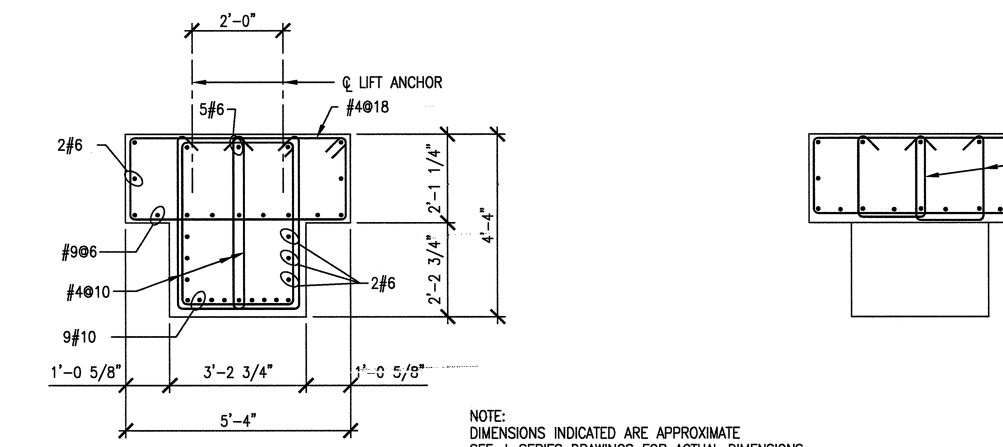

NOTE:
DIMENSIONS INDICATED ARE APPROXIMATE
SEE J-SERIES DRAWINGS FOR ACTUAL DIMENSIONS

1 **T3**
SCALE : 3/8"=1'-0" SDT03311-5A

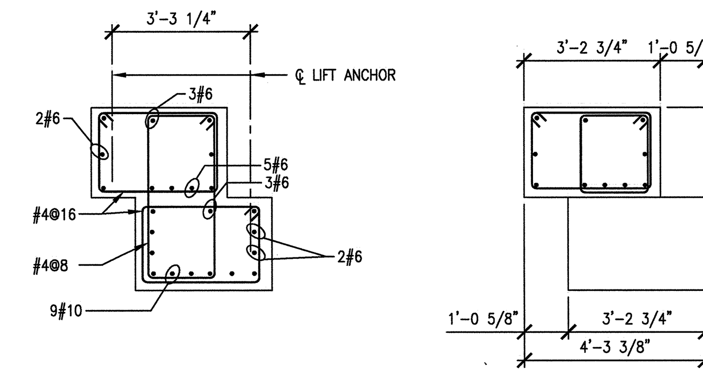

NOTE:
DIMENSIONS INDICATED ARE APPROXIMATE
SEE J-SERIES DRAWINGS FOR ACTUAL DIMENSIONS

7 / S2.03.45 **T9**
SCALE : 3/8"=1'-0" SDT03311-5A

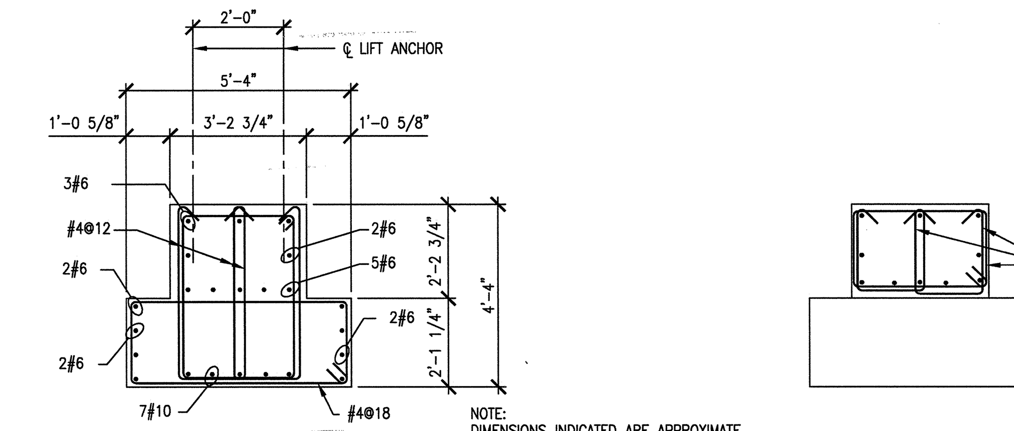

NOTE:
DIMENSIONS INDICATED ARE APPROXIMATE
SEE J-SERIES DRAWINGS FOR ACTUAL DIMENSIONS

2 **T4**
SCALE : 3/8"=1'-0" SDT03311-5A

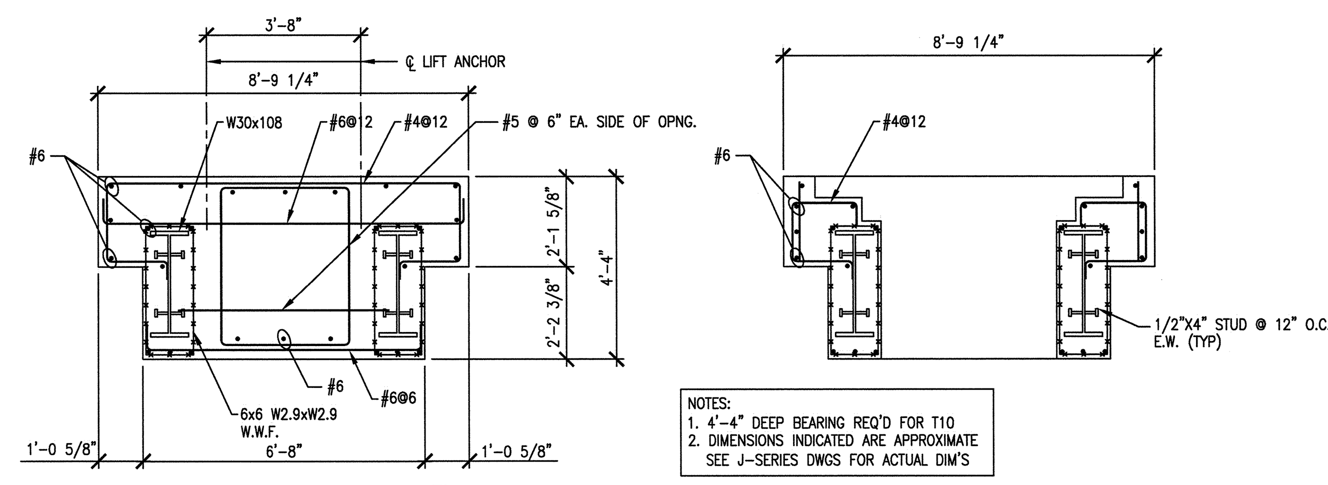

NOTES:
1. 4'-4" DEEP BEARING REQ'D FOR T10
2. DIMENSIONS INDICATED ARE APPROXIMATE SEE J-SERIES DWGS FOR ACTUAL DIM'S

8 / S2.03.45 **T10**
SCALE : 3/8"=1'-0" SDT03311-5A

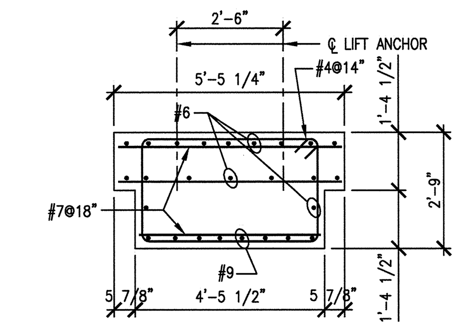

NOTE:
DIMENSIONS INDICATED ARE NOMINAL

3 / S2.03.45 **T5**
SCALE : 3/8"=1'-0" SDT03311-5A

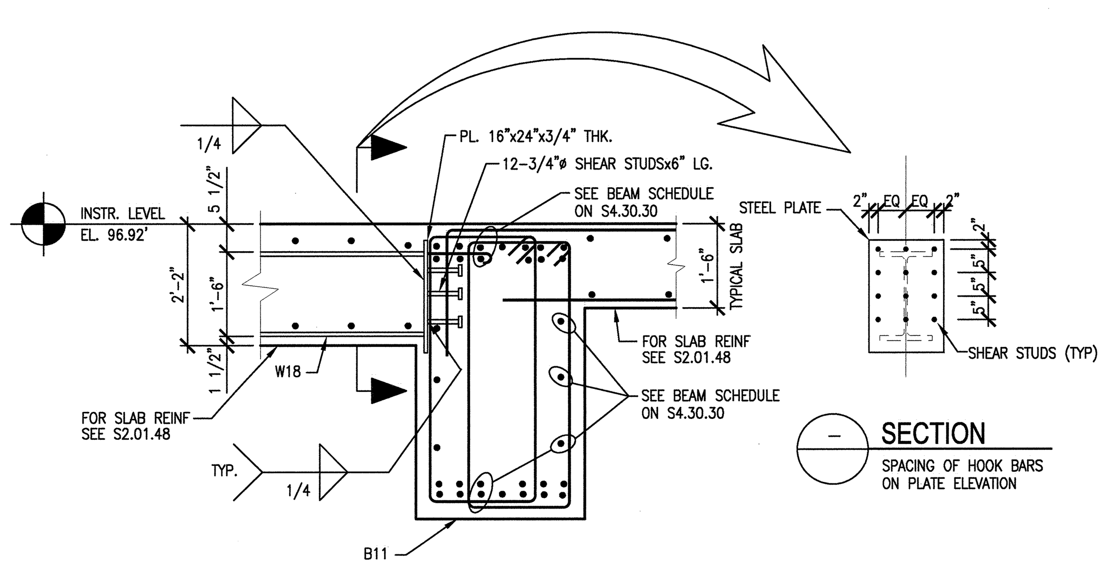

13 / S2.01.48 **SECTION**
SCALE: 1/2"=1'-0" SDT033002-5A

– **SECTION**
SPACING OF HOOK BARS ON PLATE ELEVATION

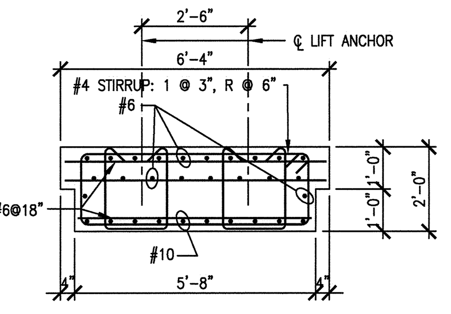

NOTE:
DIMENSIONS INDICATED ARE NOMINAL

9 / S2.02.42 **T11**
SCALE : 3/8"=1'-0" SDT03311-5A

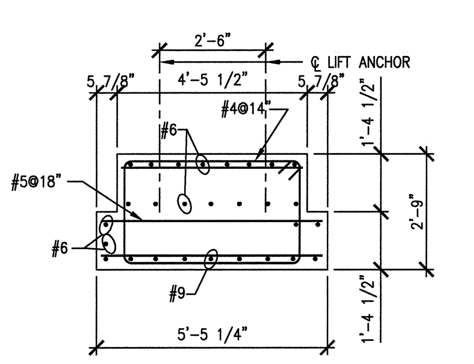

NOTE:
DIMENSIONS INDICATED ARE NOMINAL

4 / S2.03.45 **T6**
SCALE : 3/8"=1'-0" SDT03311-5A

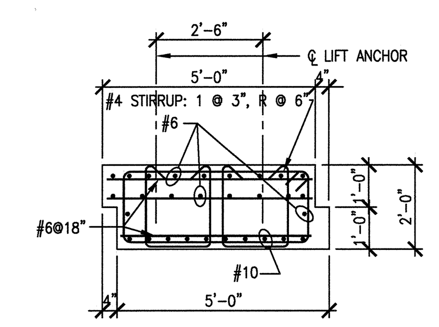

NOTE:
DIMENSIONS INDICATED ARE NOMINAL

10 / S2.02.42 **T12**
SCALE : 3/8"=1'-0" SDT03311-5A

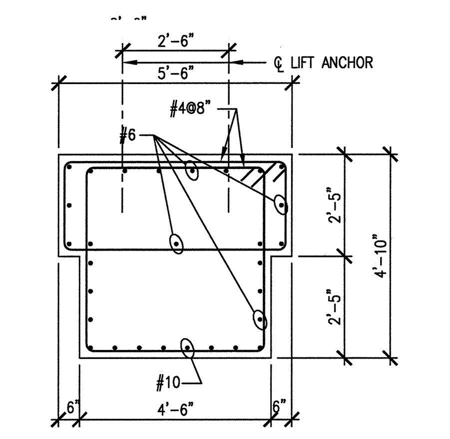

NOTE:
DIMENSIONS INDICATED ARE NOMINAL

5 / S2.03.45 **T7**
SCALE : 3/8"=1'-0" SDT03311-5A

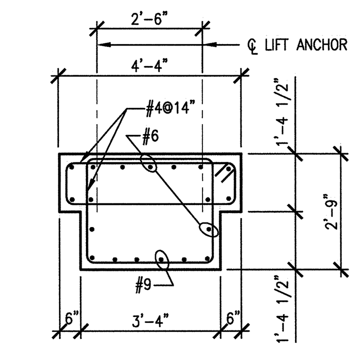

NOTE:
DIMENSIONS INDICATED ARE NOMINAL

14 / S2.03.45 **T13**
SCALE : 3/8"=1'-0" SDT03311-5A

PRECAST TEE NOTES – TEES T3 THRU T14
1. PROVIDE 2 LIFT ANCHORS AT EACH END OF BEAM. LOCATE 2'-0" FROM END OF BEAM.
2. NOTE PROVIDE DAYTON SUPERIOR SWIFT LIFT SYSTEM WITH 2 ANCHORS @ EACH END OF BEAM, LOCATED 2'-0" FROM END OF BEAM. TYPE P-52 SL STAINLESS STEEL ANCHOR, 20 TON RATED LOAD CAPACITY, 19 3/4" LONG. PROVIDE 10 UNIVERSAL LIFTING EYES, TYPE P-50 SL.
3. ADD 6-#5 STIRRUP SETS ⧉ @ 6" AT EACH END. CENTER ON LIFT ANCHOR. ADD 2-#8 x 3'-0" EACH SIDE (TOTAL 4 BARS) w/ LIFT ANCHOR. 2 SETS @ 6" O.C. SEE SECTION 9/S4.30.30 FOR SIMILAR DETAILS.

3' 2' 1' 0 3' 6'
SCALE: 3/8" = 1'-0"

NO REPRESENTATION OR WARRANTY, EXPRESSED OR IMPLIED, IS MADE AS TO THE ACCURACY, COMPLETENESS OR USEFULNESS OF THE INFORMATION OR STATEMENTS CONTAINED IN THESE DRAWINGS, OR THAT THE USE OR DISCLOSURE OF ANY INFORMATION, APPARATUS, METHOD, OR PROCESS DISCLOSED IN THESE DRAWINGS MAY NOT INFRINGE PRIVATE RIGHTS OF OTHERS. NO LIABILITY IS ASSUMED WITH RESPECT TO THE USE OF, OR FOR DAMAGES RESULTING FROM THE USE OF ANY INFORMATION, APPARATUS, METHOD, OR PROCESS DISCLOSED IN THESE DRAWINGS. DRAWINGS MADE AVAILABLE FOR INFORMATION TO BIDDER ARE NOT TO BE USED FOR OTHER PURPOSES AND ARE TO BE RETURNED UPON REQUEST OF THE FORWARDING CONTRACTOR.

SECTION AND DETAIL KEY
NUMBER OF SECTION OR DETAIL
DRAWING ON WHICH SECTION OR DETAIL IS SHOWN OR TAKEN

THIS DOCUMENT CONTROLLED BY
CHANGE CONTROL SYSTEM 3
ENGINEERING PROCEDURE SNS-ENG-G001

REV	CHANGE TYPE	CHANGE CONTROL SYSTEM	CHANGE REQUEST NUMBER	DESCRIPTION	DSN	CHK	DEPT	DATE	PE	DATE	PJ	DATE	REQ	DATE	UTB	DATE	RPE	RPE NO	DATE	ST	CV	EC	EE	EM	IE	M	PD	SE	AR
0				CERTIFIED FOR CONSTRUCTION – 10/26/01	GPR	REW			GJD	11/15/01	RAD	11/14/01			CRS	11/14/01	JJB	23236	11/13/01	REW		WRS	AK	WRS	BWJ		MP		ED

REVISION OR ISSUE PURPOSE — REVISION APPROVALS — SQUAD CHECK

RPE
JOHN BUSCH, REGISTERED ENGINEER, AGRICULTURE, COMMERCE, NO. 23236, STATE OF TENNESSEE

DSN	G. REDDY	10/26/01
DRW	G.MARSZALEK	10/26/01
CHK	R.WALKINGTON	10/26/01
DEPT		
PE	P J Warren	11/15/01
PJ	R A Dean	11/14/01
REQ		

REV. 0 DATE 11/13/01 UTB [signature] 11/14/01
DRAWING APPROVALS

108030700-S8E-8700-A097

Knight/Jacobs Joint Venture
701 Scarboro Road, MS 8253
Oak Ridge, TN 37830
865-241-9433
fax 865-241-3400

KNIGHT
Knight Advanced Technology
549 West Randolph Street
Chicago, IL 60661

UT-BATTELLE
Oak Ridge National Laboratory
managed for the DEPARTMENT OF ENERGY under U.S. GOVERNMENT contract DE-AC05-00OR22725
UT-BATTELLE, LLC, © Oak Ridge, Tennessee

PROJECT NAME:
SPALLATION NEUTRON SOURCE

TARGET BUILDING
CONCRETE SECTIONS AND DETAILS

1	48	49	50	PLANT	BLDG	FL	SH.	OF	TYPE	CLASS
3	S	X	X	8	8700		1	1	S	U
51 NC	52 NA			53	WBS 1.8.3.7		S4.30.31			REV 0

NEXT ASS'Y FINAL ASS'Y

AutoCAD

Date: 11/13/2001 Time: 15:02:10
Username: MARSZALEKGJ
CHI-F_VOL2:PROJECTS\7000\700_CADD\TASK_5A\740_PLOT\S4-30-31.DWG