8 | 7 | 6 | 5 | 4 | 3 | 2 | NEXT ASS'Y | 1 FINAL ASS'Y

CONCRETE BEAM SCHEDULE

Mark	Size: Width (in.)	Size: Depth (in)	Reinforcing Steel: Bottom Bars	Top Bars: Left Support	Top Bars: Right Support	Top Bars: Top Continous	Side Bars (Ea. Face)	Stirrups: Size	Stirrups: Type	Stirrups: Spacing	See Detail
B1	36	48	22#11 in two layers	22#11 in two layers	22#11 in two layers	22#11 in two layers	3#11	#6	□□	6"	12/S4.20.33
B2	36	48	13#11 in two layers	13#11 in two layers	13#11 in two layers	13#11 in two layers	3#11	#5	□□	8"	13/S4.20.33
B3	12	24	4#10	4#10	4#10	4#10	0	#5	□	8"	14/S4.20.33
B4	30	48	11#9	11#9	11#9	11#9	3#11	#6	□	8"	15/S4.20.33
B5	30	48	10#9	10#9	10#9	10#9	3#11	#5	□	8"	16/S4.20.33
B6	36	48	17#11 in 2 layers	17#11 in 2 layers	17#11 in 2 layers	17#11 in 2 layers	3#11	#5	□□	8"	
B7	18	78 (1B)	2#11	2#11	2#11	2#11	6#11	#5	□	12"	
B8	30	40	13#10 in 2 layers	13#10 in 2 layers	13#10 in 2 layers	13#10 in 2 layers	2#7	18#5 □ @ 4 EA. END + #5 @ 8 REM.			
B9	30	40	10#11	3#11	3#11	3#11	2#11	#6	□	8"	
B10	30	42	16#10 in 2 layers	16#10 in 2 layers	16#10 in 2 layers	5#10	2#7	15#5 □□ @ 6 EA. END + #5 @ 8 REM.			
B11	36	48	13#11 in two layers	13#11 in two layers	13#11 in two layers	13#11 in two layers	3#11	#6	□□	8"	
B12	32	48	14#11 in 2 layers	14#11 in 2 layers	14#11 in 2 layers	14#11 in 2 layers	3#11	#5	□□	10"	
B13	42	44	17#11	5#11	5#11	5#11	4#11	#5	□	8"	T/BEAM EL. 92.58'
B14	30	48	11#9	11#9	11#9	11#9	3#11	#5	□	10"	
B15	40	64 (1B)	10#9	10#11	10#11	10#11	5#9	#6	□□	8"	
G1	48	72	41#11 in 3 layers	12#11	12#11	12#11	3#9	54#5 □□ @ 3 EA. END + #5 □□ @ 6 REM.			
G2	42	72	30#11	8#11	8#11	8#11	3#9	32#5 □□ @ 3 EA. END + #5 □□ @ 6 REM.			
NOT USED	–	–	–	–	–	–	–	–			
G4	30	72	11#11	9#9	9#9	9#9	3#7	#5 □ @ 12			
B16	19 (1A)	48	7#11 in 2 layers	7#11 in 2 layers	7#11 in 2 layers	7#11 in 2 layers	3#11	#5	□	4"	
B17	10	24	2#6	2#6	2#6	2#6	–	#5	□	12"	
B18	26	30	3#11	3#11	3#11	3#11	–	#5	□	12"	
B19	30	48	9#11	9#11	9#11	9#11	3#11	#6	□	6"	
B20	30	40	5#11	3#11	3#11	3#11	3#11	#5	□	12"	
B21	18	36	5#10	2#10	2#10	2#10	2#10	#5	□	12"	
B22	24	36	6#10	6#10	6#10	6#10	1#10	#5	□	12"	
B23	24	76	6#9	6#9	6#9	6#9	4#9	#5	□	12"	

* For beam sections see S4.20.33

CONCRETE COLUMN / PILASTER SCHEDULE

Column Mark	Perimeter Columns	Perimeter Columns	Perimeter Columns	Columns	Large Columns	Columns				
	B-1, C-1, D-1, H-1, I-1, J-1,	A-2.5, A-4, A-5, A-6, A-7, A-8, A-9, A-10, A-11, A-12, A-13, A-14, K-2.5, K-4, K-5, K-6, K-7, K-8, K-9, K-10, K-11, K-12, K-13, K-14,	E.1-16, F.9-16	B-15, C-15, D-15, H-15, I-15, J-15	E-1, E-2.5, E-7, E-8, E-9, E-10, E-11, E-12, E-13, E-14, E-15, G-1, G-2.5, G-7, G-8, G-9, G-10, G-11, G-12, G-13, G-14, G-15	B-11, B-12, B-13, B-14, B.6-11, B.6-12, B.6-13, B.6-14, C.3-9, C.3-10, C.3-11, C.3-14, D-10, D-11, D-14, D-9, F-13, F-14, F-15, F-16, H-9, H-10, H-11, H-12, H-13, H-14, I.2-11, I.2-12, I.2-13, I.2-14, J-11, J-12, J-13, J-14	D.6-6, G-6	A-1, A-15, K-1, K-15, D.5-16, G.5-16	F.6 – 9.7, F.6 – 10.6	F12
Level										
f'c	4000 psi	5000 psi	4000 psi	4000 psi	4000 psi	6000 psi	4000 psi	4000 psi	4000 psi	4000 psi
Instrument Level										
Size	36" X 32"	32" X 36"	32" X 36"	36" X 32"	32" X 54"	32" x 32"	42" x 42"	36" x 36"	64" x 40"	32" x 32"
Reinf.	16#11	16#11	16#11	16#11	24#11	20#10	28#11	16#11	18#11	20#10
Ties	#4@6"	#4@6"	#4@6"	#4@6"	#4@6"	#4@6"	#4@6"	#4@6"	#4@6"	#4@6"
Column Detail	Type 2 *	Type 1 *	Type 11*	Type 9 *	Type 3 *	Type 4 *	Type 5 *	Type 10*& 6*	Type 7 *	Type 8 *

Basement Level / Mat
Elev. 76.92'

* For column detail types see 11/S4.30.30

WALL SCHEDULE

WALL NUMBER	WALL BOTTOM ELEV.	WALL THICKNESS	REINFORCEMENT(BOTH FACES) VERTICAL	REINFORCEMENT(BOTH FACES) HORIZONTAL	DOWEL DETAIL #	ALL WALLS fc'=4000ksi fy=60,000ksi UNLESS NOTED BELOW
W-1	76.92'	40"	#8@12"	#7@12"	3 & 4	
W-2	76.92'	24"	#9@12"	#6@12"	4	
W-3	76.92'	55"	#9@12	#8@10"	9	
W-4	76.92'	24"	#6@12"	#6@12"	3	
W-5	76.92'	24"	#10@9"	#6@12"	3	
W-6	76.92'	18"	#6@12"	#5@12"	3, 4 & 5	
W-7	76.92'	24"	#11@10"	#6@12"	4 & 6	fc'= 5000
W-8	76.92'	18"	#8@12"	#5@12"	3	
NOT USED (1A)	76.92'	36"	#8@10"	#6@12"	4	fc'= 5000
W-10	76.92'	40"	#8@12"	#7@12"	3	
W-11	76.92'	34"	#7@12"	#7@12"	3	
W-12	76.92'	42"	#8@12"	#7@12"	3	
W-13	76.92'	48"	#8@10"	#8@12"	3	
W-14	76.92"	30"	#7@12"	#6@12"	3 & 5	
W-15	76.92'	28"	#8@12"	#6@12"	5	
W-16	76.92'	38"	#8@12"	#7@12"	3	
W-17	NOT USED	NOT USED	NOT USED	NOT USED	NOT USED	NOT USED
W-18	71.92'	20"	#5@12"	#4@12"	5	
W-19	96.92'	16"	#6@12"	#5@12"	5	
W-20	96.92'	12"	#5@12"	#4@12"	5	

PRE-CAST "T" BEAM SCHEDULE

"T" BEAM MARK	"T" BEAM SIZE	BOTTOM BARS (CONT.)	MIDDLE BARS (CONT.)	TOP BARS (CONT.)	STIRRUPS	CONCRETE WEIGHT (PCF)	OTHER
T1 – Above Hot Cell	52" x 24"	4#9	2#6	5#9	2 Pairs of #4@12"	145	Stainless steel liners on side of hot cell roof
T2-INSTRUMENT LLLW	54" x 24"						SEE 9/S4.30.30

NOTES:
1. SEE S4.30.31 FOR ADDITIONAL T-BEAMS
2. SEE J-SERIES DRAWINGS FOR ADDITIONAL DIMENSIONS & OTHER INFORMATION

SLAB SCHEDULE

MARK	THICKNESS (IN.)	BOTTOM BARS	TOP BARS: LEFT SUPPORT	TOP BARS: CONT. SUPPORT	RIGHT SUPPORT	TEMP. REINF.	REMARKS
S1	18"	#8@12"	#8@12"	#8@12"	#8@12"	#5@12" T&B	
S2	64"	#11@6"	#11@6"	#11@6"	#11@6"	#11@12" T&B	
S3	40"	#11@12"	#11@12"	#11@12"	#11@12"	#7@12" T&B	
S4	24"	#8@6"	#8@6"	#8@6"	#8@6"	#7@12" T&B	
S4A	12"	#7@12"	#7@12"	#7@12"	#7@12"	#4@12" T&B	
S4B	12"	#6@12"	#6@12"	#6@12"	#6@12"	#4@12" T&B	

NOTES:
1. SEE SHEET S4.30.31 FOR CONTINUATION OF SCHEDULE.
2. COMPOSITE FLOOR DECK NOTES ON PLANS INCLUDES STEEL DECKING & CONCRETE (TYP.)

GRADE BEAM SCHEDULE

fy = 60 ksi
fc = 4 ksi

Mark	Size: Width (in.)	Size: Depth (in)	Reinforcing Steel: Bottom Bars	Top Bars: Left Support	Top Bars: Right Support	Side Bars (Ea. Face)	Stirrups Size	Type	Spacing	Clear concrete cover: Top (in.)	Bttom (in.)	Side (in.)	See Detail
GB1	30	60	6#11	6#11	6#11	3#9	#5	□	8"	2"	3"	3"	9/S4.20.33
GB2	42	60	6#11	6#11	6#11	3#9	#5	□	8"	2"	3"	3"	10/S4.20.33
GB3	30	60	4#11	4#11	4#11	3#9	#5	□	12"	2"	3"	3"	11/S4.20.33
GB4	30	60	4#11	4#11	4#11	3#9	#5	□	12"	2"	3"	3"	
GB5	30	60	4#11	4#11	4#11	3#9	#5	□	8"	2"	3"	3"	
GB6	30	60	6#11	6#11	6#11	3#9	#5	□	12"	2"	3"	3"	
GB7	30	60	8#11	8#11	8#11	3#9	#5	□	10"	2"	3"	3"	
GB8	58	60	9#11	9#11	9#11	3#9	#6	□	8"	2"	3"	3"	
GB9	24	42	3#10	3#10	3#10	2#10	#5	□	4"	3"	3"	3"	

For grade beam sections see S4.20.33

REINFORCEMENT DOWEL SCHEDULE

BAR NUMBER	L1	L2	L3
#9	3'-6"	1'-7"	2'-10"
#8	3'-1"	1'-4"	2'-6"
#7	2'-9"	1'-2"	2'-2"
#6	2'-4"	1'-0"	1'-11"
#5	1'-11"	10"	1'-7"

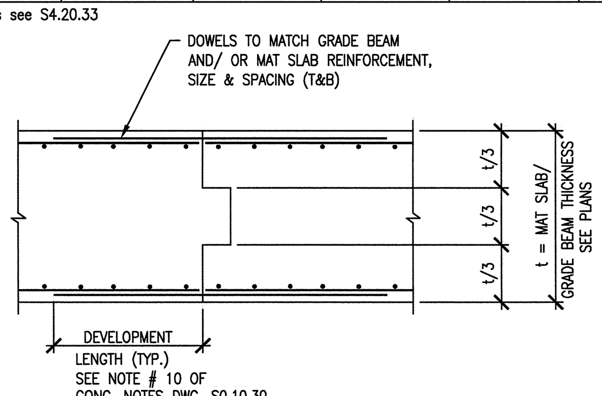

NOTE: (1) PROVIDE CONSTRUCTION JOINTS ONLY @ 1/3 SPAN OF GRADE BEAM AND/ OR MAT SLAB

13 CONSTRUCTION JOINT @ BASE MAT
S1.FP.31 SCALE : NONE SDT03311-5A

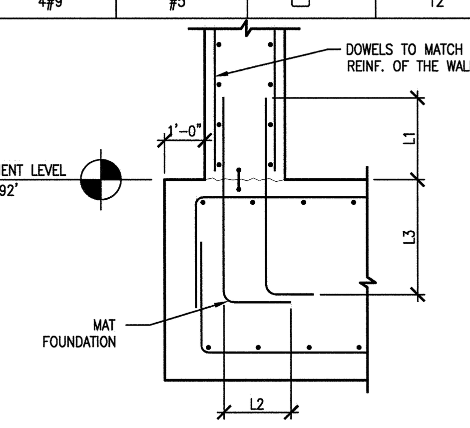

10 DETAIL AT MAT & EXTERIOR WALL
S4.30.30 SCALE : NONE SDT033014-5A

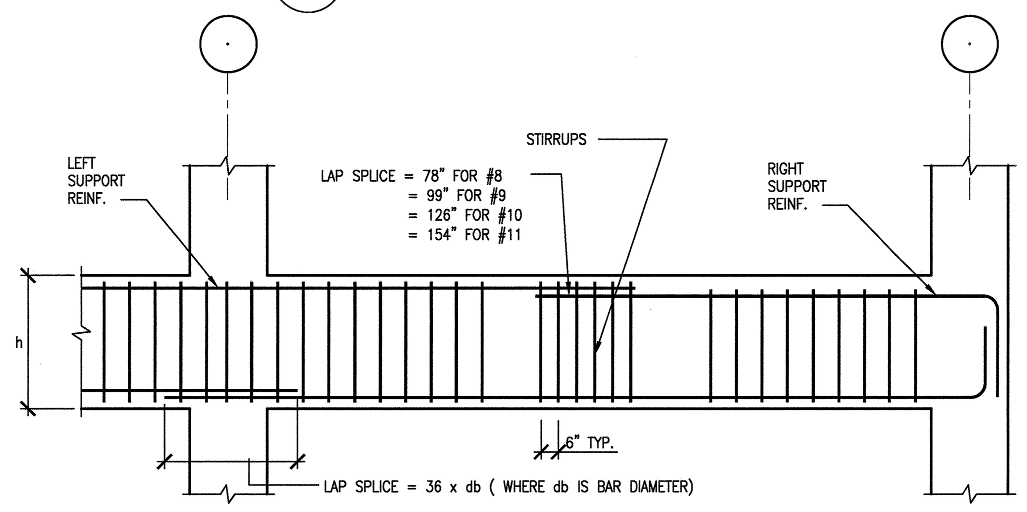

12 TYP. BEAM ELEVATION
S4.30.30 SCALE : NONE SDT033014-5A

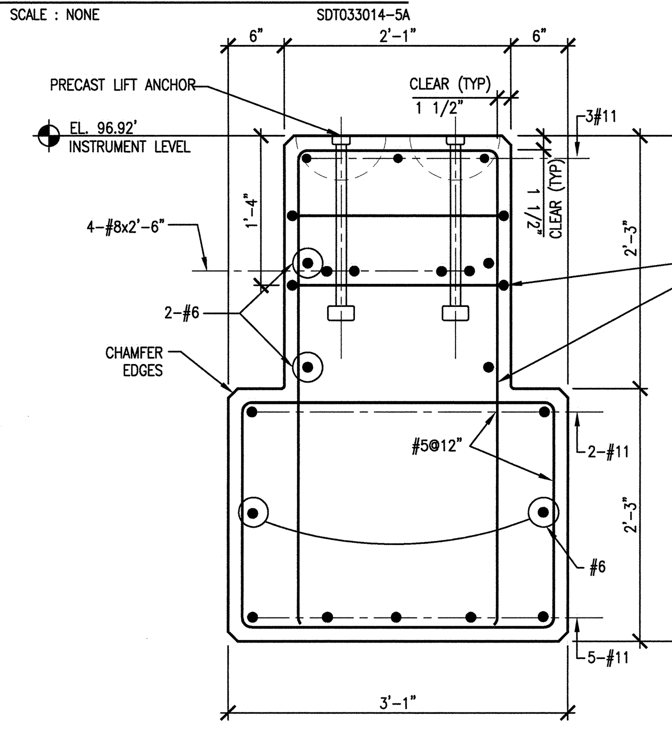

T1 SECTION

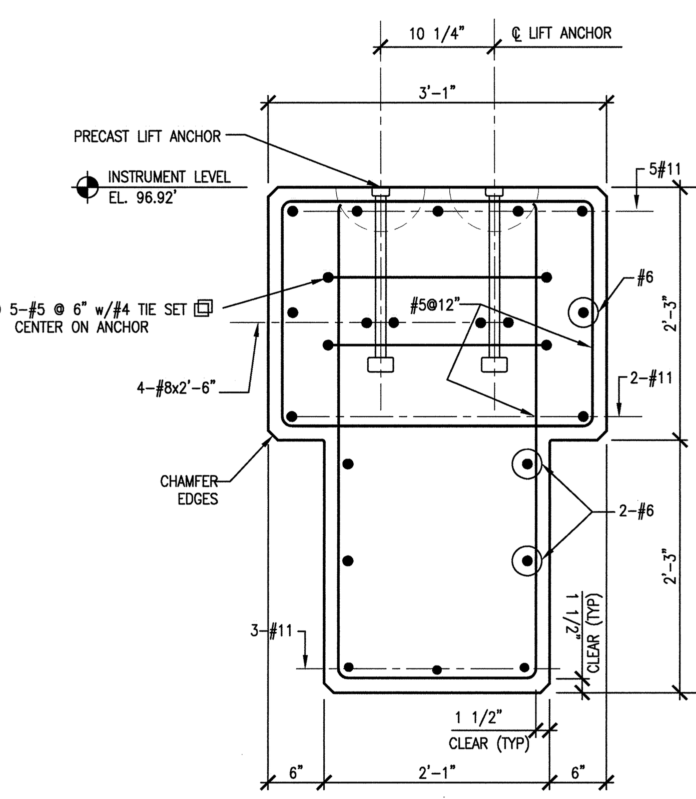

T2 SECTION

NOTE: PROVIDE DAYTON SUPERIOR SWIFT LIFT SYSTEM WITH 2 ANCHORS @ EACH END OF BEAM LOCATED 2'-0" FROM END OF BEAM. PROVIDE P-52 SL STAINLESS STEEL ANCHOR, 20 TON RATED CAPACITY, 19 3/4" LONG, PROVIDE 10 UNIVERSAL LIFTING EYES, TYPE P-50 SL.

9 SECTION
S4.30.30 SCALE: 1"=1'-0" SDT03311-5A

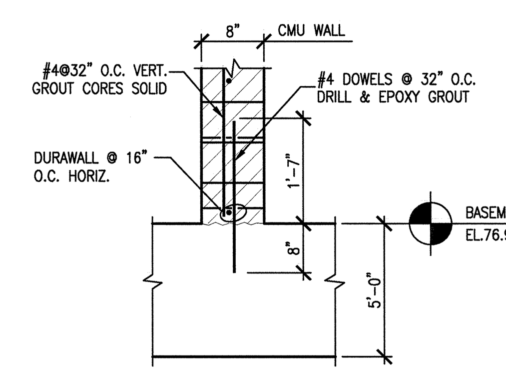

7 MASONRY WALL DETAIL
S2.B1.44 SCALE : NONE SDT033014-5A

S2.B1.43 S2.B1.45 S2.B1.46 S2.B1.47 S2.B1.48 S2.B1.49 S2.01.44 S2.01.47

NOTES:
1. PILES & REINFORCEMENT IN MAT & SLAB ARE NOT SHOWN FOR CLARIFICATION.
2. FOR MASONRY WALL REINFORCEMENT SEE ARCH DWG. A9.30.32

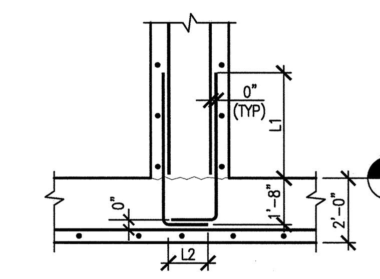

5 DETAIL
S4.30.30 SCALE : NONE SDT033014-5A

NOTE:
PILES & REINFORCEMENT IN MAT & SLAB ARE NOT SHOWN FOR CLARIFICATION.

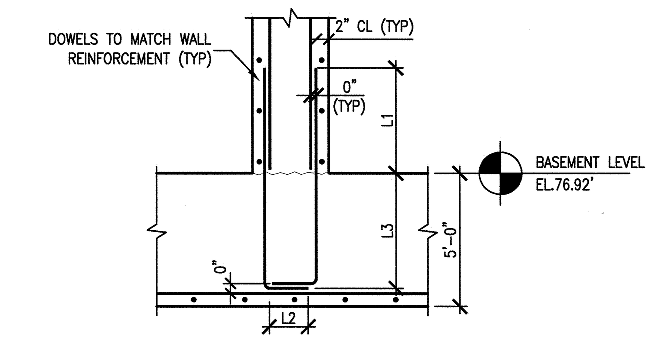

3 DETAIL
S4.30.30 SCALE : NONE SDT033014-5A

NOTE:
PILES & REINFORCEMENT IN MAT & SLAB ARE NOT SHOWN FOR CLARIFICATION.

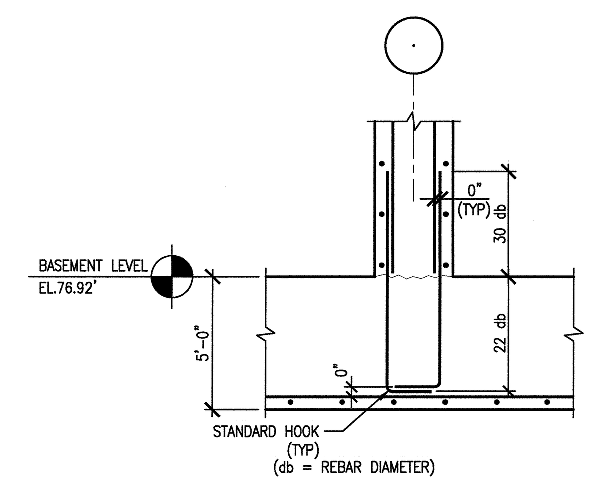

8 TYPICAL COL. DOWEL DETAIL @ BASEMENT LEVEL
S4.30.30 SCALE : NONE SDT033014-5A

NOTE:
PILES & REINFORCEMENT IN MAT & SLAB ARE NOT SHOWN FOR CLARIFICATION.

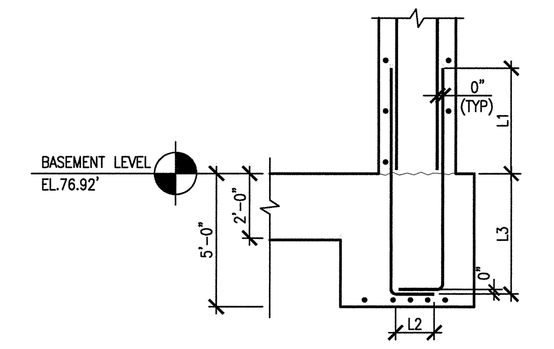

6 DETAIL
S4.30.30 SCALE : NONE SDT033014-5A

NOTE:
PILES & REINFORCEMENT IN MAT & SLAB ARE NOT SHOWN FOR CLARIFICATION.

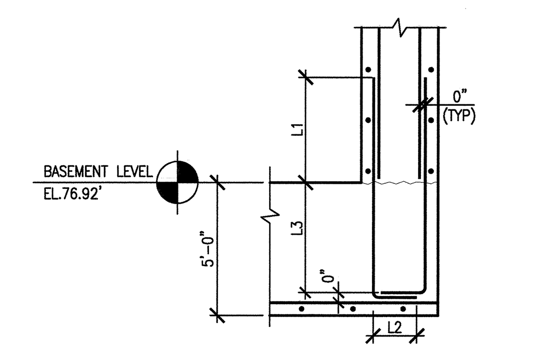

4 DETAIL
S4.30.30 SCALE : NONE SDT033014-5A

NOTE:
PILES & REINFORCEMENT IN MAT & SLAB ARE NOT SHOWN FOR CLARIFICATION.

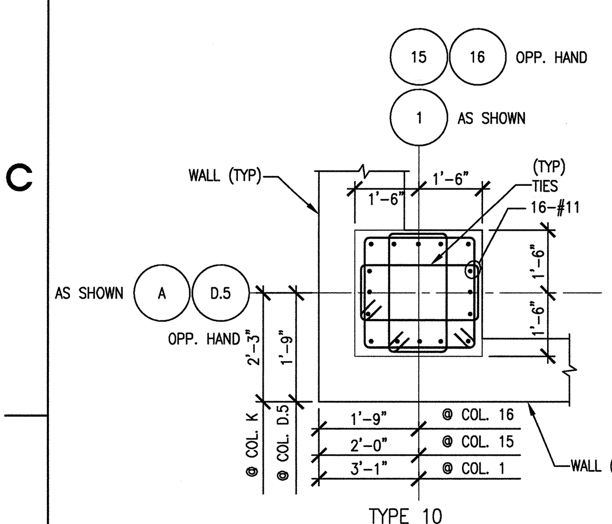

TYPE 10

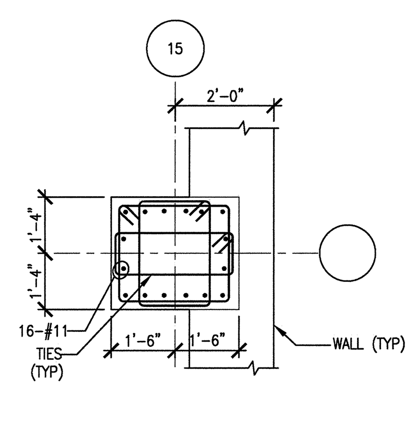

TYPE 9

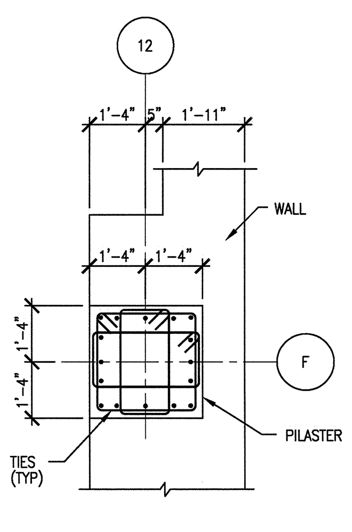

TYPE 8

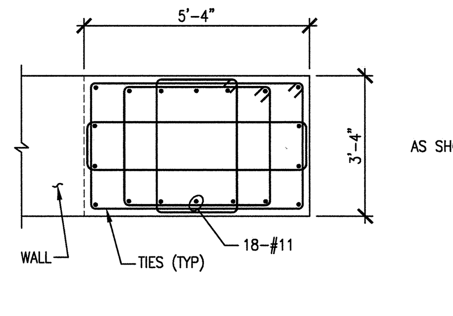

TYPE 7

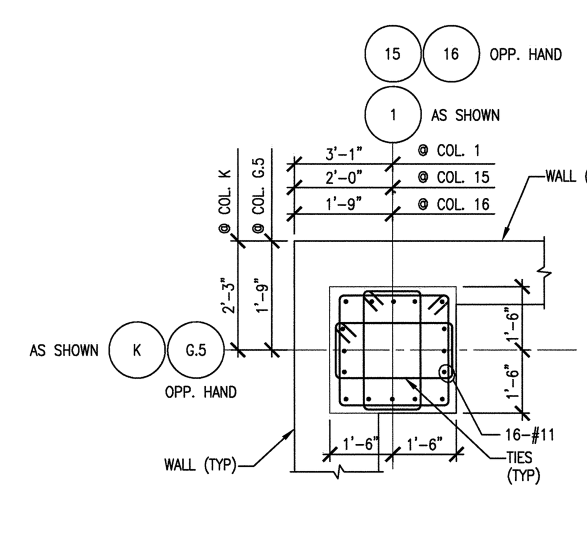

TYPE 6

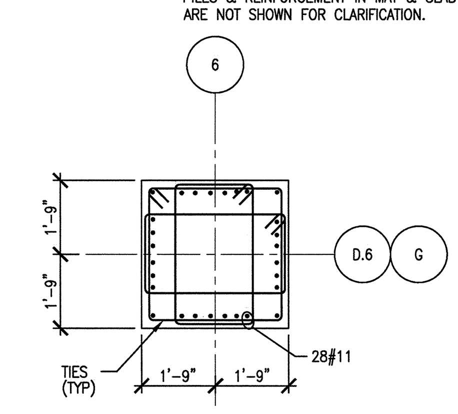

TYPE 5

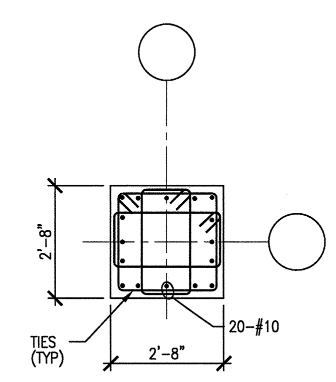

TYPE 4

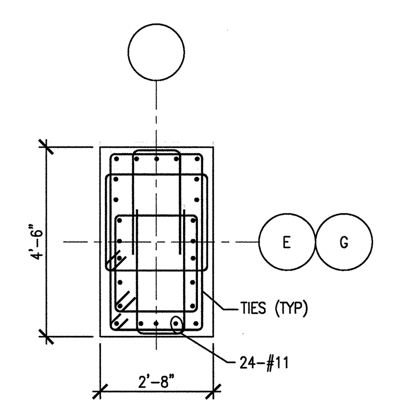

TYPE 3

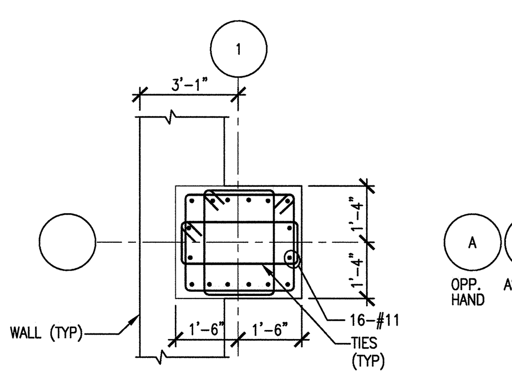

TYPE 2

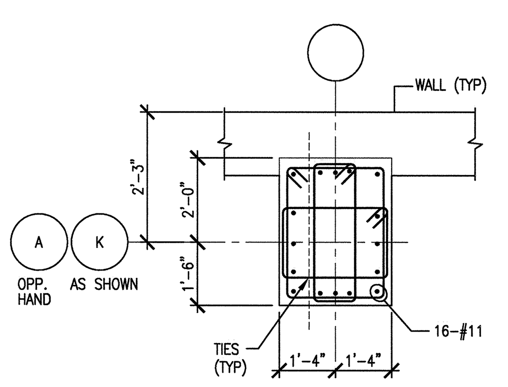

TYPE 1

3' 2' 1' 0 3' 6'
SCALE: 3/8" = 1'-0"

11 COLUMN DETAILS
S4.30.30 SCALE : 3/8"=1'-0" SDT03311-5A

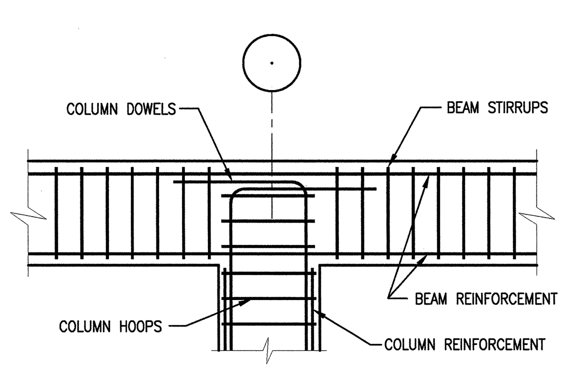

14 TYP. PIER/PILASTER ELEVATION
S4.30.30 SCALE : NONE SDT033014-5A

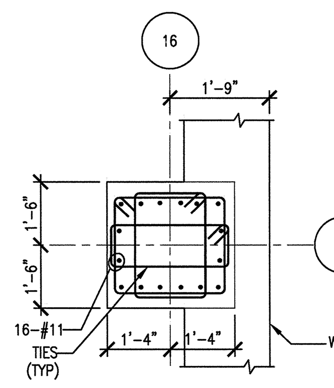

TYPE 11

NO REPRESENTATION OR WARRANTY, EXPRESSED OR IMPLIED, IS MADE AS TO THE ACCURACY, COMPLETENESS OR USEFULNESS OF THE INFORMATION OR STATEMENTS CONTAINED IN THESE DRAWINGS, OR THAT THE USE OR DISCLOSURE OF ANY INFORMATION, APPARATUS, METHOD, OR PROCESS DISCLOSED IN THESE DRAWINGS MAY NOT INFRINGE PRIVATE RIGHTS OF OTHERS. NO LIABILITY IS ASSUMED WITH RESPECT TO THE USE OF, OR FOR DAMAGES RESULTING FROM THE USE OF ANY INFORMATION, APPARATUS, METHOD, OR PROCESS DISCLOSED IN THESE DRAWINGS. DRAWINGS MADE AVAILABLE FOR INFORMATION TO BIDDER ARE NOT TO BE USED FOR OTHER PURPOSES AND ARE TO BE RETURNED UPON REQUEST OF THE FORWARDING CONTRACTOR.

NUMBER OF SECTION OR DETAIL — DRAWING ON WHICH SECTION OR DETAIL IS SHOWN OR TAKEN
SECTION AND DETAIL KEY

THIS DOCUMENT CONTROLLED BY
CHANGE CONTROL SYSTEM 3
ENGINEERING PROCEDURE SNS-ENG-G001

REV	CHANGE TYPE	CHANGE CONTROL SYSTEM	CHANGE REQUEST NUMBER	DESCRIPTION	DSN	CHK	DEPT	DATE	PE	DATE	PJ	DATE	REQ	DATE	UTB	DATE	RPE	RPE NO	DATE	ST	CV	EC	EE	EM	IE	M	PD	SE	AR
2				CERTIFIED FOR CONSTRUCTION – 10/26/01	GPR	REW			[signature]	11/15/01	RAD	11/14/01			[signature]	11/14/01	JJB	23236	11/13/01	REW		WRS	AK	WRS	BWJ		MP		ED
1	A	3	1-13	DCN T-001 THRU T-013 – 9/21/01	GPR	REW			CLG	3/01	RAD	2/01			JRL	2/01	JJB	23236	9/21/01	REW		WRS	RL	WRS	BWJ		MP		WAS
0				SUBSTRUCTURES CERTIFIED FOR CONSTRUCTION – 4/18/01	GPR	REW			CLG	4/18	RAD	4/18			JRL	4/19	JJB	23236	4/17/01	SC		WRS	RL	WRS	BWJ		MP		WAS

REVISION OR ISSUE PURPOSE | REVISION APPROVALS | SQUAD CHECK

RPE
JOHN BUSCH REGISTERED ENGINEER AGRICULTURE COMMERCE NO. 23236 STATE OF TENNESSEE
REV. 2 DATE 11/13/01

DSN	G. REDDY	4/17/01
DRW	G.MARSZALEK	4/17/01
CHK	R.WALKINGTON	4/17/01
DEPT		
PE	C. GARREN	4//18/01
PJ	R. DEAN	4//18/01
REQ		
UTB	J. LAWSON	4/19/01

DRAWING APPROVALS

108030700-S8E-8700-A094

Knight/Jacobs SNS
Knight/Jacobs Joint Venture
701 Scarboro Road, MS 8253
Oak Ridge, TN 37830
865-241-9433
fax 865-241-3400

KNIGHT
Knight Advanced Technology
549 West Randolph Street
Chicago, IL 60661

UT-BATTELLE
Oak Ridge National Laboratory
managed for the DEPARTMENT OF ENERGY under U.S. GOVERNMENT contract DE-AC05-00OR22725
UT-BATTELLE, LLC, Oak Ridge, Tennessee

PROJECT NAME:
SPALLATION NEUTRON SOURCE

TARGET BUILDING
CONCRETE SCHEDULES AND DETAILS
SECTIONS & DETAILS

1	48	49	50	PLANT	BLDG	FL	SH.	OF	TYPE	CLASS
3	S	X	X	8	8700		1	1	S	U
51	52	53			WBS					REV
NC	NA				1.8.3.7		S4.30.30			2

AutoCAD

Date: 11/13/2001 Time: 15:07:36
Username: MARSZALEKGJ
CHI-F_VOL2:PROJECTS\7000\700_CADD\TASK_5A\740_PLOT\S4-30-30.DWG