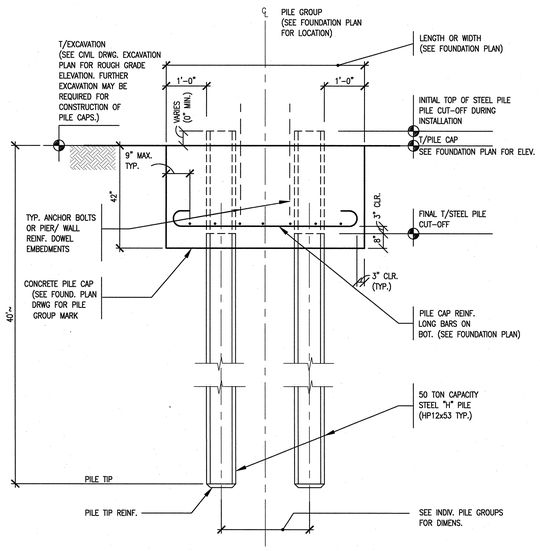

7 TYPICAL CONCRETE CAP/STEEL "H" PILE DETAIL
SCALE : NO SCALE SDT033013-5A

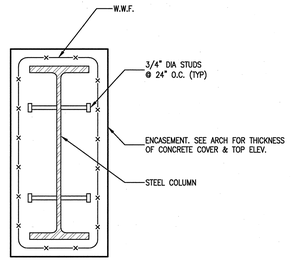

4 PLAN AT COLUMN ENCASEMENT
S2.01.56 SCALE: NONE SDT033013-5A

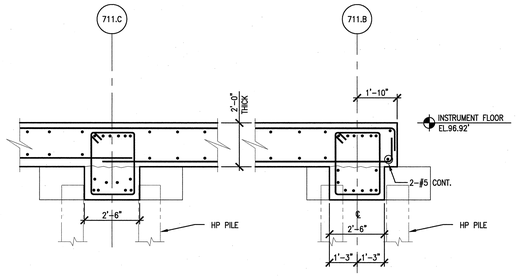

3 SECTION THRU FLOOR SLAB
S2.01.56 SCALE : 3/8"=1'-0" SDT033012-5A

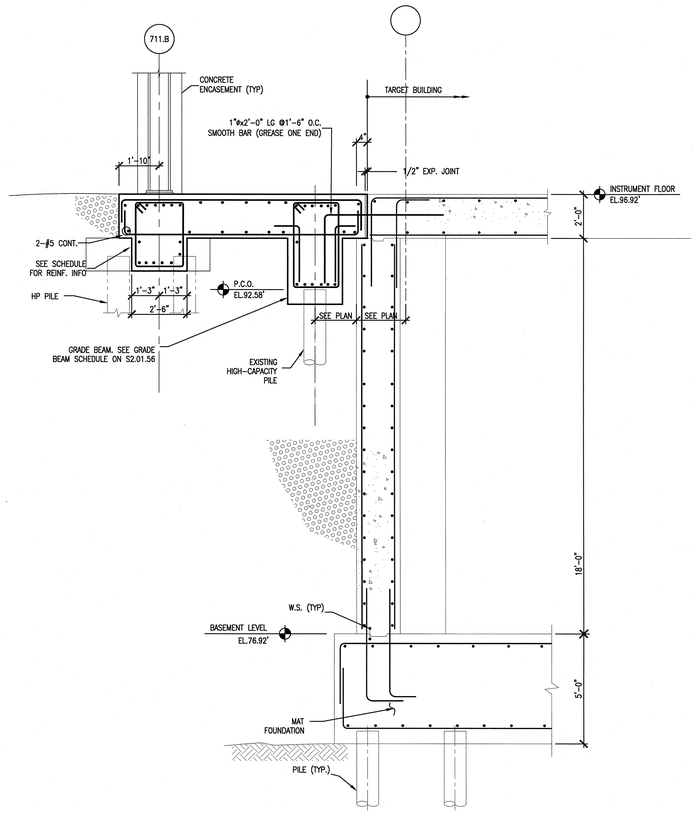

1 SECTION
S2.01.56 SCALE : 3/8"=1'-0" SDT033012-5A

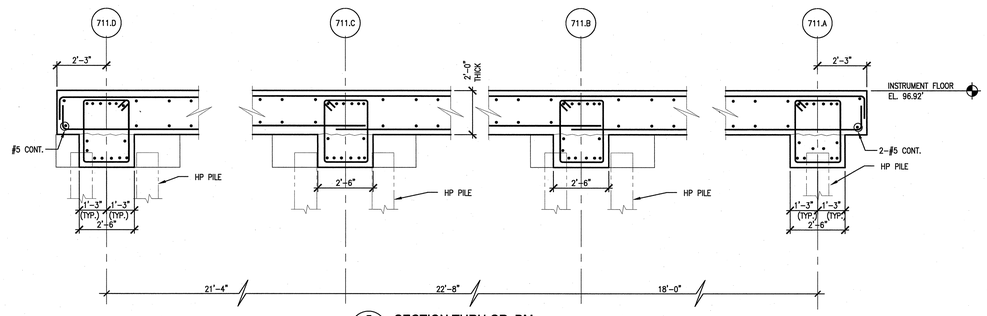

5 SECTION THRU GR. BM.
S2.01.56 SCALE : 3/8"=1'-0" SDT033012-5A

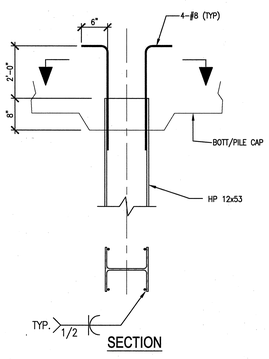

8 ALTERNATE 50 TON CAPACITY PIPE DETAIL
SCALE : NO SCALE SDT033013-5A

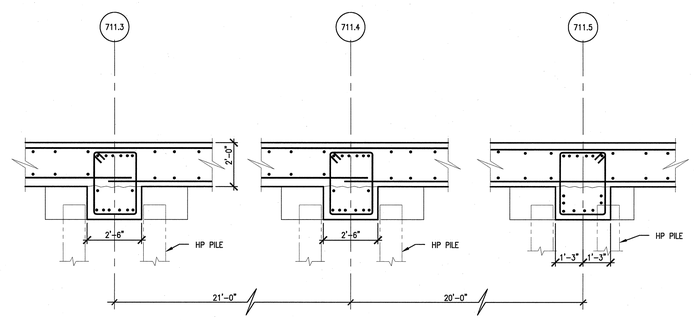

6 SECTION THRU GR. BM.
S2.01.56 SCALE : 3/8"=1'-0" SDT033012-5A

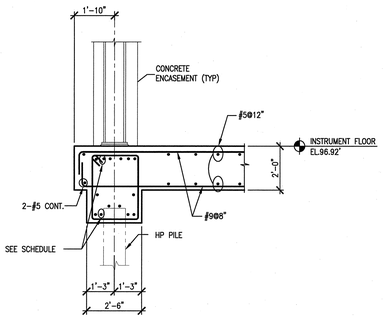

2 SECTION THRU GR. BM.
S2.01.56 SCALE : 3/8"=1'-0" SDT033012-5A

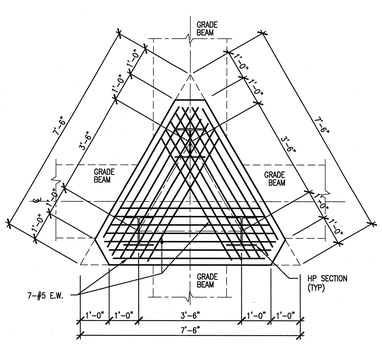

13 3-PILE CAP LAYOUT PLAN
SCALE : 1/2"=1'-0" SDT033013-5A

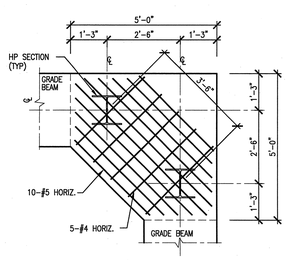

12 2-PILE CORNER CAP LAYOUT PLAN
SCALE : 1/2"=1'-0" SDT033013-5A

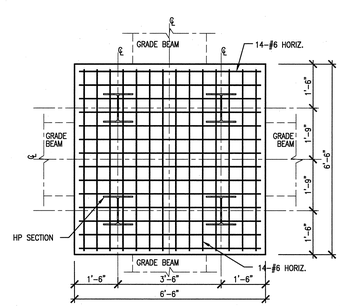

11 4-PILE CAP LAYOUT PLAN
SCALE : 1/2"=1'-0" SDT033013-5A

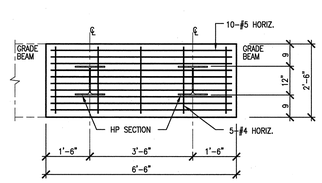

10 2-PILE CAP LAYOUT PLAN
SCALE : 1/2"=1'-0" SDT033013-5A

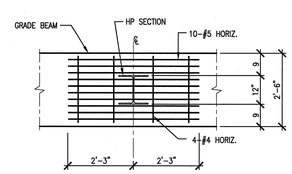

9 ONE PILE CAP LAYOUT PLAN
SCALE : 1/2"=1'-0" SDT033013-5A

2' 1' 0 2' 4'
SCALE: 1/2" = 1'-0"

3' 2' 1' 0 3' 6'
SCALE: 3/8" = 1'-0"

108030700-S8E-8711-A002

Knight/Jacobs Joint Venture
701 Scarboro Road, MS 8253
Oak Ridge, TN 37830
865-241-9433
fax 865-241-3400

KNIGHT
Knight Advanced Technology
540 West Randolph Street
Chicago, IL 60661

UT-BATTELLE
Oak Ridge National Laboratory
managed for the DEPARTMENT OF ENERGY under
U.S. GOVERNMENT contract DE-AC05-00OR22725
UT-BATTELLE, LLC, © Oak Ridge, Tennessee

PROJECT NAME:
SPALLATION NEUTRON SOURCE
BUILDING 11TU
CONCRETE SECTIONS AND DETAILS
LEVEL 1, SECTOR 56

1	48	49	50	PLANT	BLDG	FL	SH.	OF	TYPE	CLASS
3	S	X	X	8	8711		1	1	S	U
51	52	53	WBS							REV
NC	NA		1.8.3.7		S4.21.39					1

RPE	DSN	G. REDDY	3/2/01
	DRW	G.MARSZALEK	3/2/01
	CHK	R.WALKINGTON	3/2/01
	DEPT		
	PE	C. GARREN	3/14/01
	PJ	R. DEAN	3/15/01
	REQ		
	UTB	J. LAWSON	3/15/01

JOHN BUSCHER REGISTERED ENGINEER STATE OF TENNESSEE

REV. 1 DATE 10/26/01
DRAWING APPROVALS

REV	CHANGE TYPE	CHANGE CONTROL SYSTEM	CHANGE REQUEST NUMBER	DESCRIPTION	DSN	CHK	DEPT	DATE	PE	DATE	PJ	DATE	REQ	DATE	UTB	DATE	RPE	RPE NO	DATE	ST	CV	EC	EE	EM	IE	M	PD	SE	AR
1				CERTIFIED FOR CONSTRUCTION – 10/26/01	GPR	REW										JUB	23336	10/26/01	REW		WRS	AK	WRS	BWJ		MP		ED	
0				PILES CERTIFIED FOR CONSTRUCTION – 3/2/01	GPR	REW			CLG	3/14	RAD	3/15			JRL	3/15	JUB	23336	3/2/01	REW		WRS	AK	WRS	BWJ		MP		ED	

REVISION OR ISSUE PURPOSE — REVISION APPROVALS — SQUAD CHECK

NO REPRESENTATION OR WARRANTY, EXPRESSED OR IMPLIED, IS MADE AS TO THE ACCURACY, COMPLETENESS OR USEFULNESS OF THE INFORMATION OR STATEMENTS CONTAINED IN THESE DRAWINGS, OR THAT THE USE OR DISCLOSURE OF ANY INFORMATION, APPARATUS, METHOD, OR PROCESS DISCLOSED IN THESE DRAWINGS MAY NOT INFRINGE PRIVATE RIGHTS OF OTHERS. NO LIABILITY IS ASSUMED WITH RESPECT TO THE USE OF, OR FOR DAMAGES RESULTING FROM THE USE OF ANY INFORMATION, APPARATUS, METHOD, OR PROCESS DISCLOSED IN THESE DRAWINGS. DRAWINGS MADE AVAILABLE FOR INFORMATION TO BIDDER ARE NOT TO BE USED FOR OTHER PURPOSES AND ARE TO BE RETURNED UPON REQUEST OF THE FORWARDING CONTRACTOR.

NUMBER OF SECTION OR DETAIL
DRAWING ON WHICH SECTION OR DETAIL IS SHOWN OR TAKEN
SECTION AND DETAIL KEY

THIS DOCUMENT CONTROLLED BY
CHANGE CONTROL SYSTEM 3
ENGINEERING PROCEDURE SNS-ENG-G001

Date: 10/24/2001 Time: 13:33:10
Filename: S4.21.39
CD-R:C:\PCLIB\PROJECTS\BCVB\V06_CADD\SGN_SAC\NS_PLOT\S4-21-39.DWG

AutoCAD