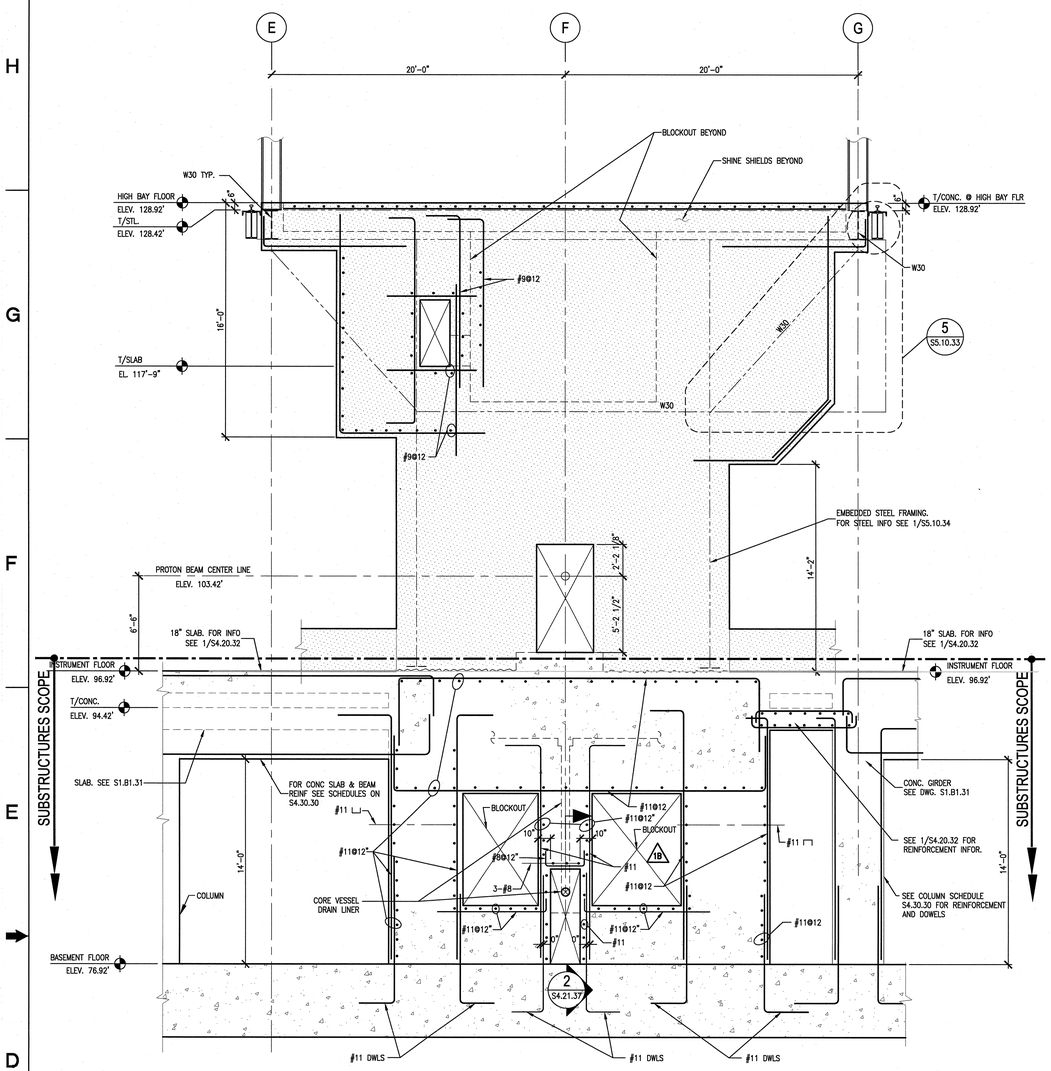

8 SECTION AT COL. LINE 6
S2.01.45 SCALE: 1/4"=1'-0" SSC011-5A
S4.20.34 NOTE: FOR ADDITIONAL INFO SEE SECT. 1/S4.21.37
S2.B1.45
S2.B1.42
S2.01.42

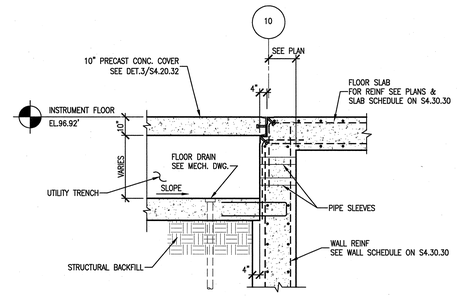

5 SECTION
S2.01.44 SCALE: 3/8"=1'-0" SDT033015-5A
S2.01.46

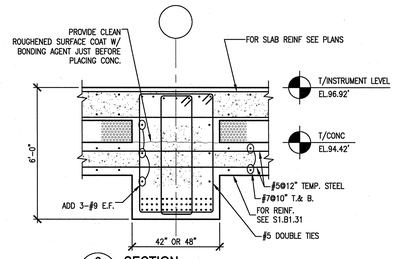

6 SECTION
S1.B1.31 SCALE: 3/8"=1'-0" SDT033015-5A
S2.01.41
S2.01.43

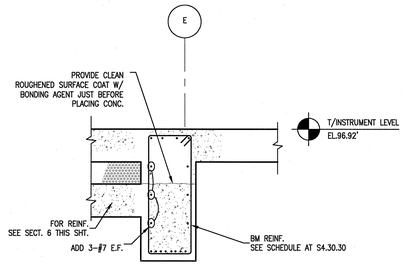

7 SECTION
S1.B1.31 SCALE: 3/8"=1'-0" SDT033015-5A
S2.01.45

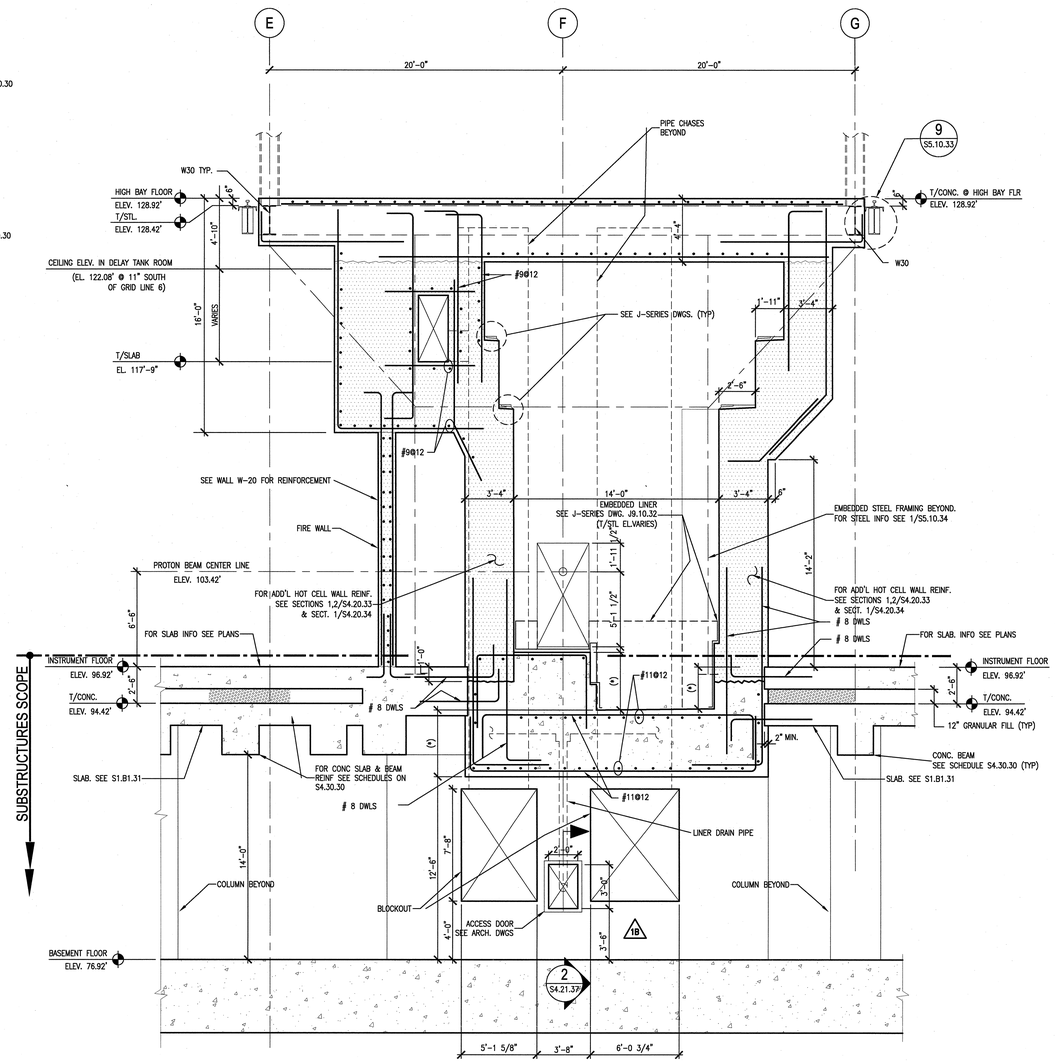

1 SECTION
S2.01.45 SCALE: 1/4"=1'-0" SSC002-5A
S4.20.34 NOTE: (*) – INDICATES DIMENSIONS TO BE VERIFIED WITH MERRICK DWGS.
S2.B1.45
S2.B1.42

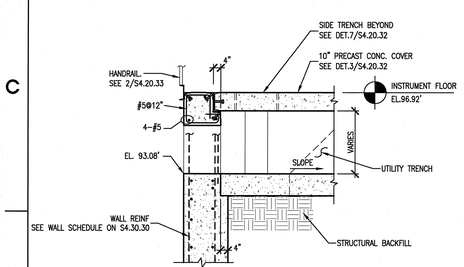

10 SECTION
S2.01.41 SCALE: 3/8"=1'-0" SDT033015-5A

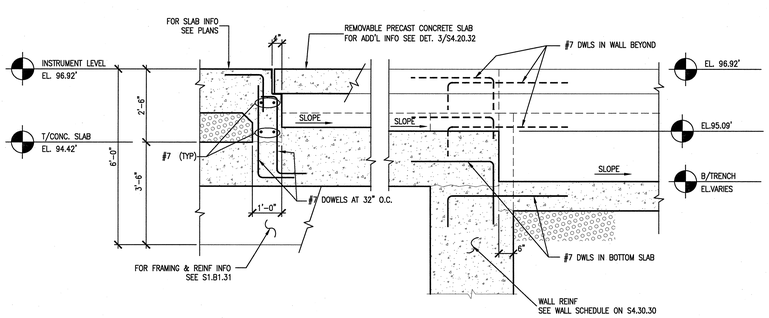

9 SECTION
S2.01.44 SCALE: 1/2"=1'-0" SDT033002-5A
S2.01.46

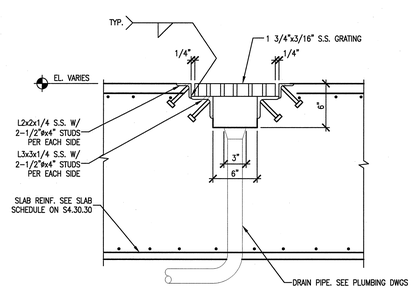

4 FLOOR DRAIN SECTION
S2.B1.44 SCALE: 1 1/2"=1'-0" SDT033001-5A
S1.B1.49

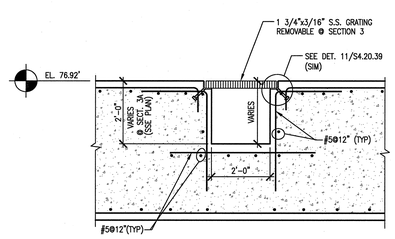

3A 3 TRENCH CROSS SECTION
S2.B1.43 S2.B1.43 SCALE: 1/2"=1'-0" SDT033002-5A
S2.B1.44

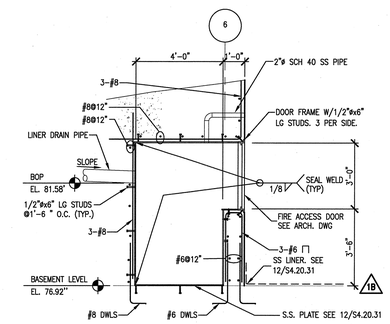

2 SECTION
S2.B1.42 SCALE: 3/8"=1'-0" SDT033015-5A

4' 2' 0 4' 8'
SCALE: 1/4" = 1'-0"

NO REPRESENTATION OR WARRANTY, EXPRESSED OR IMPLIED, IS MADE AS TO THE ACCURACY, COMPLETENESS OR USEFULNESS OF THE INFORMATION OR STATEMENTS CONTAINED IN THESE DRAWINGS, OR THAT THE USE OR DISCLOSURE OF ANY INFORMATION, APPARATUS, METHOD, OR PROCESS DISCLOSED IN THESE DRAWINGS MAY NOT INFRINGE PRIVATE RIGHTS OF OTHERS. NO LIABILITY IS ASSUMED WITH RESPECT TO THE USE OF, OR FOR DAMAGES RESULTING FROM THE USE OF ANY INFORMATION, APPARATUS, METHOD, OR PROCESS DISCLOSED IN THESE DRAWINGS. DRAWINGS MADE AVAILABLE FOR INFORMATION TO BIDDER ARE NOT TO BE USED FOR OTHER PURPOSES AND ARE TO BE RETURNED UPON REQUEST OF THE FORWARDING CONTRACTOR.

NUMBER OF SECTION OR DETAIL — DRAWING ON WHICH SECTION OR DETAIL IS SHOWN OR TAKEN

SECTION AND DETAIL KEY

THIS DOCUMENT CONTROLLED BY

CHANGE CONTROL SYSTEM 3

ENGINEERING PROCEDURE SNS-ENG-G001

REV	CHANGE TYPE	CHANGE CONTROL SYSTEM	CHANGE CONTROL NUMBER	DESCRIPTION	DSN	CHK	DEPT	DATE	PE	DATE	PJ	DATE	REQ	DATE	UTB	DATE	RPE	RPE NO	DATE	ST	CV	EC	EE	EM	IE	M	PD	SE	AR
2				CERTIFIED FOR CONSTRUCTION – 10/26/01	GPR	REW				10/15/01	RAD	10/15/01			JRL	10/15/01	JJB	23236	10/26/01	REW		WRS	AK	WRS	BWJ		MP		ED
1	A	3	1-13	DCN T-001 THRU T-013 – 9/21/01	GPR	REW			CLG	10/03	RAD	10/02			JRL	10/02	JJB	23236	9/21/01	REW		WRS	RL	WRS	BWJ		MP		WAS
0				SUBSTRUCTURES CERTIFIED FOR CONSTRUCTION – 4/18/01	GPR	REW			CLG	4/18	RAD	4/18			JRL	4/19	JJB	23236	4/17/01	SC		WRS	RL	WRS	BWJ		MP		WAS

REVISION OR ISSUE PURPOSE — REVISION APPROVALS — SQUAD CHECK

RPE: JOHN BUSCH, REGISTERED ENGINEER, AGRICULTURE, STATE OF TENNESSEE, NO. 23236

REV. 2 DATE 10/26/01

DRAWING APPROVALS

DSN	G. REDDY	4/17/01
DRW	G.MARSZALEK	4/17/01
CHK	R.WALKINGTON	4/17/01
DEPT		
PE	C. GARREN	4/18/01
PJ	R. DEAN	4/18/01
REQ		
UTB	J. LAWSON	4/19/01

108030700-S8E-8700-A092

Knight Jacobs — Knight/Jacobs Joint Venture, 701 Scarboro Road, MS 8253, Oak Ridge, TN 37830, 865-241-9433, fax 865-241-3400

KNIGHT — Knight Advanced Technology, 543 West Randolph Street, Chicago, IL 60661

UT-BATTELLE — Oak Ridge National Laboratory, managed for the DEPARTMENT OF ENERGY under U.S. GOVERNMENT contract DE-AC05-00OR22725. UT-BATTELLE, LLC. © Oak Ridge, Tennessee

PROJECT NAME: SPALLATION NEUTRON SOURCE

TARGET BUILDING
CONCRETE SECTIONS AND DETAILS

1	48	49	50	PLANT	BLDG	FL	SH.	OF	TYPE	CLASS
3	S	X	X	8	8700		1	1	S	U
51		52		53	WBS					REV
NC		NA			1.8.3.7		S4.21.37			2

AutoCAD

Date: 10/24/2001 Time: 13:24:25
Username: GARREN
DG-P:\PEL2\PROJECTS\TGBR\DG_CAD\S\SCH_SAP\MS_PLOT\24-11-37.DWG