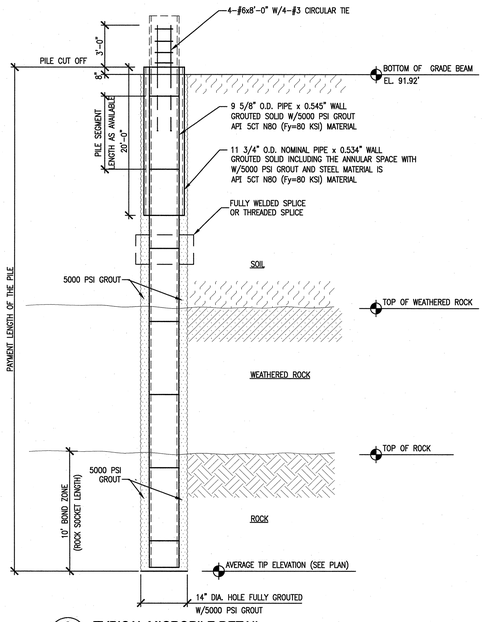

8 S4.21.36 TYPICAL MICROPILE DETAIL
SCALE: NONE SFS001-5A
(400 KIPS ALLOWABLE LOAD CAPACITY)

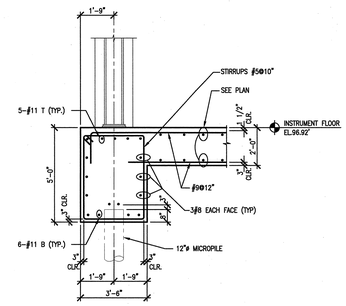

4 S2.01.50 SECTION THRU GB1
SCALE : 3/8"=1'-0" SDT033012-5A

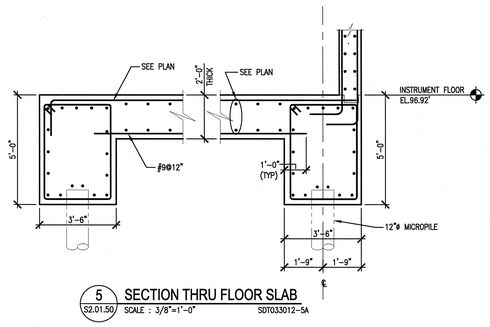

5 S2.01.50 SECTION THRU FLOOR SLAB
SCALE : 3/8"=1'-0" SDT033012-5A

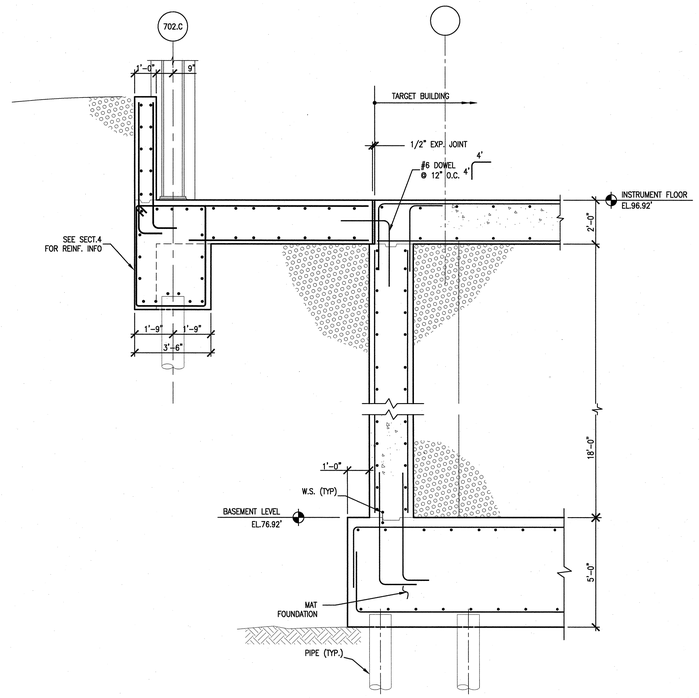

1 S2.01.50 SECTION
SCALE : 3/8"=1'-0" SDT033012-5A

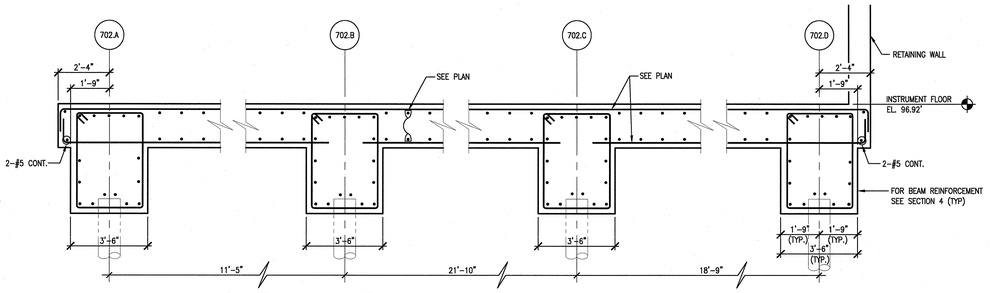

6 S2.01.50 SECTION THRU GR. BM.
SCALE : 3/8"=1'-0" SDT033012-5A

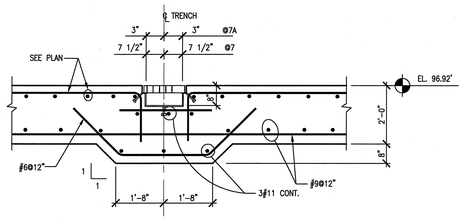

7,7A S2.01.50 SECTION
SCALE : 1/2"=1'-0" SDT033002-5A

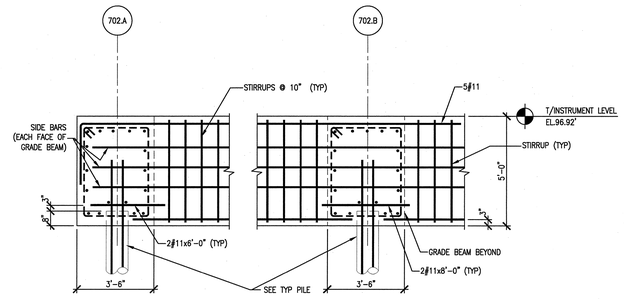

3 S2.01.50 SECTION
SCALE : 3/8"=1'-0" SDT033012-5A

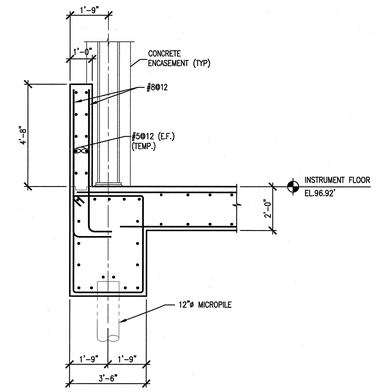

2 S2.01.50 SECTION THRU COL. PIER
SCALE : 3/8"=1'-0" SDT033012-5A

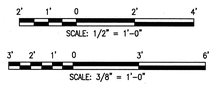

NO REPRESENTATION OR WARRANTY, EXPRESSED OR IMPLIED, IS MADE AS TO THE ACCURACY, COMPLETENESS OR USEFULNESS OF THE INFORMATION OR STATEMENTS CONTAINED IN THESE DRAWINGS, OR THAT THE USE OR DISCLOSURE OF ANY INFORMATION, APPARATUS, METHOD, OR PROCESS DISCLOSED IN THESE DRAWINGS MAY NOT INFRINGE PRIVATE RIGHTS OF OTHERS. NO LIABILITY IS ASSUMED WITH RESPECT TO THE USE OF, OR FOR DAMAGES RESULTING FROM THE USE OF ANY INFORMATION, APPARATUS, METHOD, OR PROCESS DISCLOSED IN THESE DRAWINGS. DRAWINGS MADE AVAILABLE FOR INFORMATION TO BIDDER ARE NOT TO BE USED FOR OTHER PURPOSES AND ARE TO BE RETURNED UPON REQUEST OF THE FORWARDING CONTRACTOR.

NUMBER OF SECTION OR DETAIL
DRAWING ON WHICH SECTION OR DETAIL IS SHOWN OR TAKEN
SECTION AND DETAIL KEY

THIS DOCUMENT CONTROLLED BY
CHANGE CONTROL SYSTEM 3
ENGINEERING PROCEDURE SNS-ENG-0001

REV	CHANGE TYPE	CHANGE CONTROL SYSTEM	CHANGE REQUEST NUMBER	DESCRIPTION	DSN	CHK	DEPT	DATE	PE	DATE	PJ	DATE	REQ	DATE	UTB	DATE	RPE	RPE NO	DATE	ST	CV	EC	EE	EM	IE	M	PD	SE	AR
1				CERTIFIED FOR CONSTRUCTION – 10/26/01	GPR	REW				10/15/01	RPD	10/15/01								REW		WRS	AK	WRS	BWJ		MP		ED
0				PILES CERTIFIED FOR CONSTRUCTION – 02/15/01	GPR	SC			CLG	2/19/01	RAD	2/19/01			JRL	2/19/01	JJB	23236	2/15/01										
																	JJB	23236	10/26/01									

REVISION OR ISSUE PURPOSE — REVISION APPROVALS — SQUAD CHECK

RPE: JOHN BUSCH, REGISTERED ENGINEER, P. ENG., AGRICULTURE, COMMERCE, NO. 23236, STATE OF TENNESSEE

DSN	G. REDDY	2/15/01
DRW	G.MARSZALEK	2/15/01
CHK	R.WALKINGTON	2/15/01
DEPT		
PE	C. GARREN	
PJ	R. DEAN	2/19/01
REQ		
UTB	J. LAWSON	2/19/01

REV. 1 DATE 10/26/01 — DRAWING APPROVALS

108030700-S8E-8702-A003

Knight/Jacobs Joint Venture
701 Scarboro Road, MS 8253
Oak Ridge, TN 37830
865-241-9433
fax 865-241-3400

KNIGHT
Knight Advanced Technology
540 West Randolph Street
Chicago, IL 60661

UT-BATTELLE
Oak Ridge National Laboratory
managed for the DEPARTMENT OF ENERGY under U.S. GOVERNMENT contract DE-AC05-00OR22725
UT-BATTELLE, LLC, + Oak Ridge, Tennessee

PROJECT NAME:
SPALLATION NEUTRON SOURCE

BUILDING 2TU
CONCRETE SECTIONS AND DETAILS
SECTOR 50

1	48	49	50	PLANT	BLDG	F'L	SH.	OF	TYPE	CLASS
3	S	X	X	8	8702		1	1	S	U
51		52		53	WBS					REV
NC		NA			1.8.3.7		S4.21.36			1

Date: 10/24/2001 Time: 13:25:10
Username: JONESTE
CH-17_VOLUME2\SDT\7000\700\D400\700K_S4\NS_FCST\24-21-36.DWG

AutoCAD