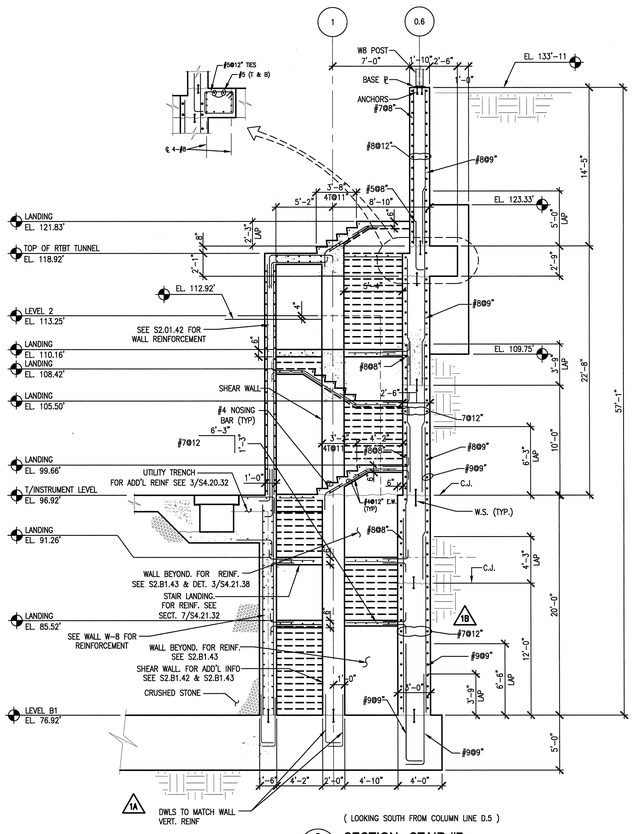

(LOOKING SOUTH FROM COLUMN LINE D.5)

3 S4.21.38 SECTION - STAIR #7
SCALE: 3/16"=1'-0" SSC010-5A
S2.B1.43 S2.02.42
S2.01.43 S2.02.43

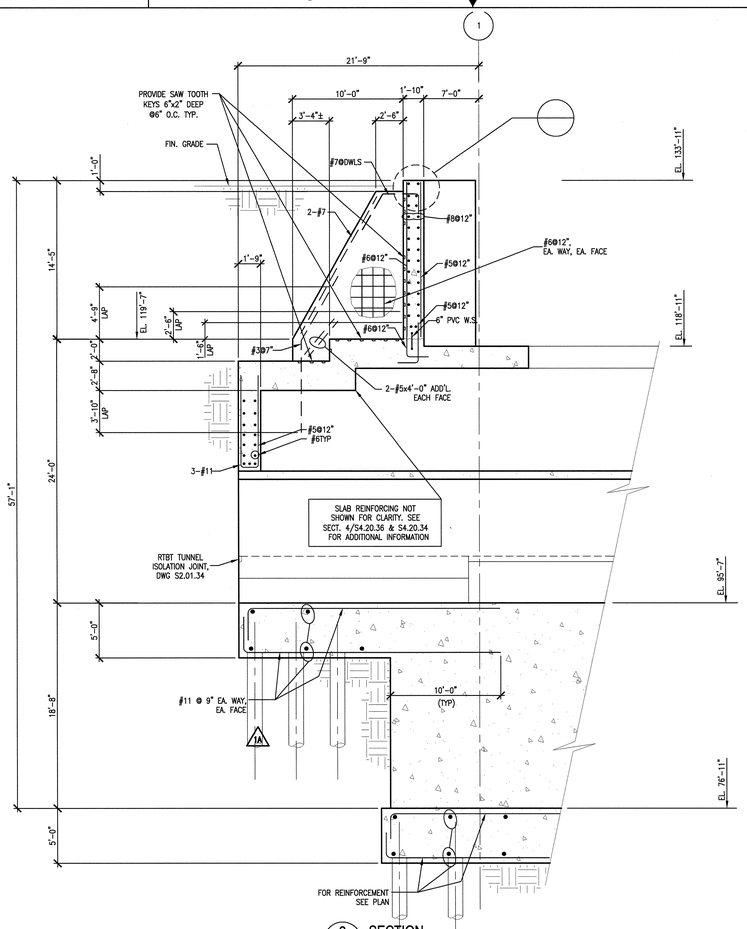

2 S2.B1.42 SECTION
SCALE: 3/16"=1'-0" SSC010-5A
S2.01.42
S2.02.42

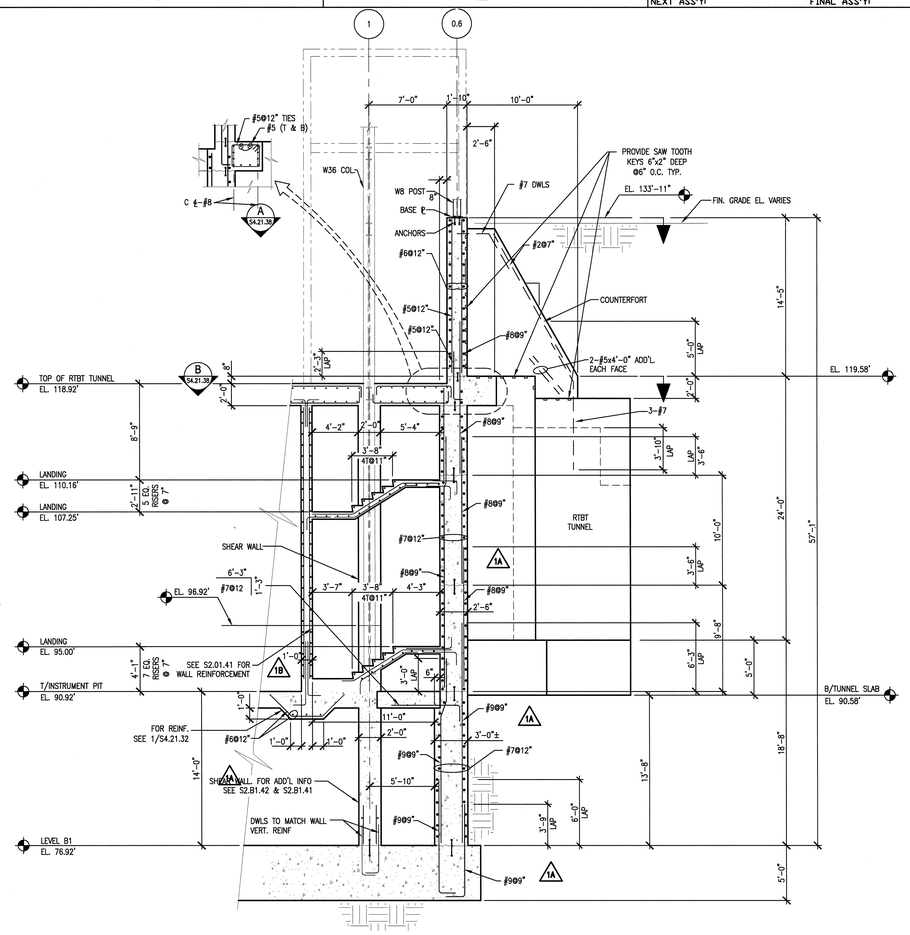

(LOOKING SOUTH FROM COLUMN LINE G)

1 S4.21.38 SECTION - STAIR #8
SCALE: 3/16"=1'-0" SSC010-5A
S2.B1.41 S2.02.41
S2.01.41 S2.02.42

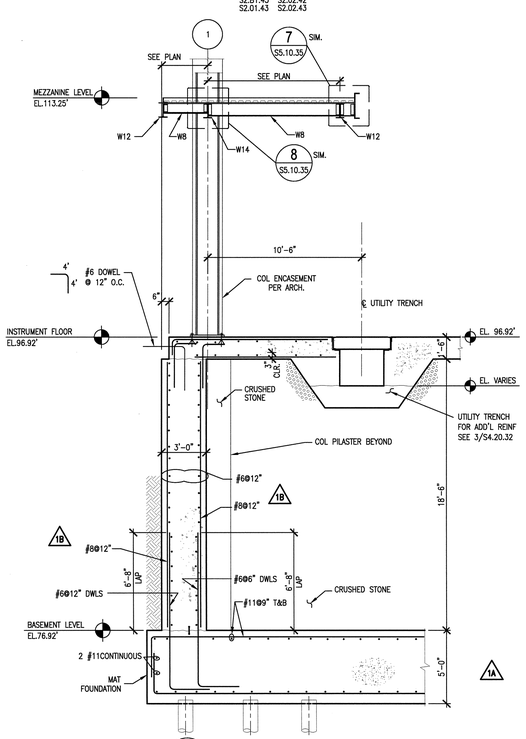

4 S2.01.43 SECTION
SCALE : 1/4"=1'-0" SSC012-5A
S2.B1.43
S2.02.43

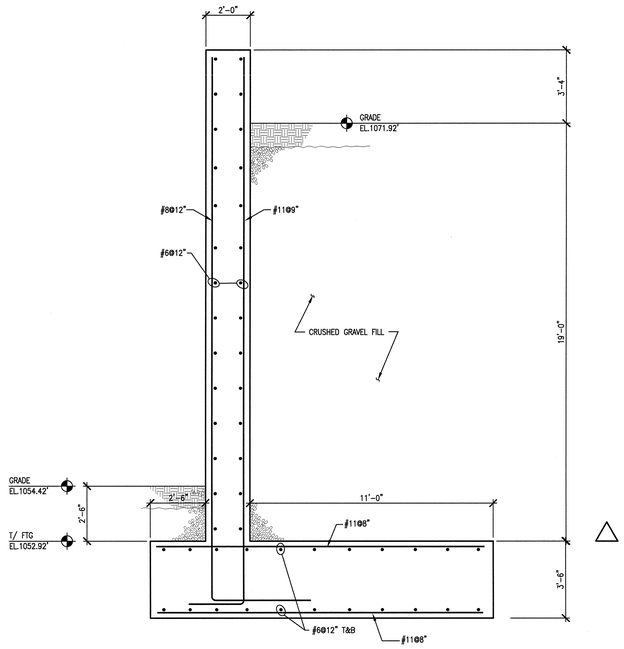

5 S2.01.47 SECTION
SCALE : 3/8"=1'-0" SDT033006-5A
S2.01.48
S2.01.49

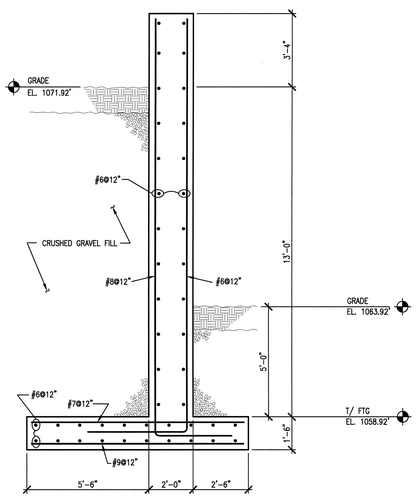

6 S1.FP.31 SECTION
SCALE : 3/8"=1'-0" SDT033006-5A

SCALE 1" = 1'-0"
SCALE: 1/4" = 1'-0"
SCALE: 3/16" = 1'-0"

NO REPRESENTATION OR WARRANTY, EXPRESSED OR IMPLIED, IS MADE AS TO THE ACCURACY, COMPLETENESS OR USEFULNESS OF THE INFORMATION OR STATEMENTS CONTAINED IN THESE DRAWINGS, OR THAT THE USE OR DISCLOSURE OF ANY INFORMATION, APPARATUS, METHOD, OR PROCESS DISCLOSED IN THESE DRAWINGS MAY NOT INFRINGE PRIVATE RIGHTS OF OTHERS. NO LIABILITY IS ASSUMED WITH RESPECT TO THE USE OF, OR FOR DAMAGES RESULTING FROM THE USE OF ANY INFORMATION, APPARATUS, METHOD, OR PROCESS DISCLOSED IN THESE DRAWINGS. DRAWINGS MADE AVAILABLE FOR INFORMATION TO BIDDER ARE NOT TO BE USED FOR OTHER PURPOSES AND ARE TO BE RETURNED UPON REQUEST OF THE FORWARDING CONTRACTOR.

NUMBER OF SECTION OR DETAIL
DRAWING ON WHICH SECTION OR DETAIL IS SHOWN OR TAKEN
SECTION AND DETAIL KEY

THIS DOCUMENT CONTROLLED BY
CHANGE CONTROL SYSTEM 3
ENGINEERING PROCEDURE SNS-ENG-G001

REV	CHANGE TYPE	CHANGE CONTROL SYSTEM	CHANGE REQUEST NUMBER	DESCRIPTION	DSN	CHK	DEPT	DATE	PE	DATE	PJ	DATE	REQ	DATE	UTB	DATE	RPE	RPE NO	DATE	ST	CV	EC	EE	EM	IE	M	PD	SE	AR
2				CERTIFIED FOR CONSTRUCTION – 10/26/01	GPR	REW			RAD 11/15/01		RAD 11/15/01				JRL 11/16/01		JJB	23236	11/13/01	REW		WRS	AK	WRS	BWJ		MP		ED
1	A	3	1–13	DCN T-001 THRU T-013 – 9/21/01	GPR	REW			CLG 10/03		RAD 10/02				JRL 10/02		JJB	23236	9/21/01	REW		WRS	RL	WRS	BWJ		MP		WAS
0				SUBSTRUCTURES CERTIFIED FOR CONSTRUCTION – 4/18/01	GPR	REW			CLG 4/18		RAD 4/18				JRL 4/19		JJB	23236	4/17/01	SC		WRS	RL	WRS	BWJ		MP		WAS

REVISION OR ISSUE PURPOSE — REVISION APPROVALS — SQUAD CHECK

RPE: JOHN BUSCH, REGISTERED ENGINEER, AGRICULTURE, CERTIFICATE NO. 23236, STATE OF TENNESSEE — REV. 2 DATE 11/13/01

DSN	G. REDDY	4/17/01
DRW	G.MARSZALEK	4/17/01
CHK	R.WALKINGTON	4/17/01
DEPT		
PE	C. GARREN	4//18/01
PJ	R. DEAN	4//18/01
REQ		
UTB	J. LAWSON	4/19/01

DRAWING APPROVALS

108030700-S8E-8700-A095

Knight/Jacobs Joint Venture
701 Scarboro Road, MS 8253
Oak Ridge, TN 37830
865-241-9433
fax 865-241-3400

KNIGHT
Knight Advanced Technology
540 West Randolph Street
Chicago, IL 60661

UT-BATTELLE
Oak Ridge National Laboratory
managed for the DEPARTMENT OF ENERGY under U.S. GOVERNMENT contract DE-AC05-00OR22725
UT-BATTELLE, LLC. + Oak Ridge, Tennessee

PROJECT NAME:
SPALLATION NEUTRON SOURCE
TARGET BUILDING
SECTIONS AND DETAILS

1	48	49	50	PLANT	BLDG	FL	SH.	OF	TYPE	CLASS
3	S	X	X	8	8700		1	1	S	U
51		52		53	WBS		S4.21.33			REV
NC		NA			1.8.3.7					2

Date: 11/13/2001 Time: 14:43:45
DGN-F:\PROJ\PROJECTS\SNS\700_CADD\A8_S4\A8_PLDT\S4-21-33.DWG