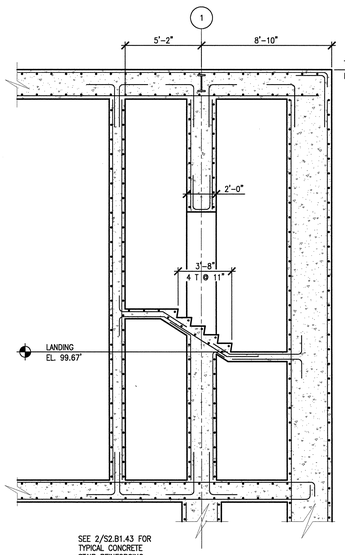

4 S2.02.42 PARTIAL SECTION - STAIR (#8)
SCALE 1/4"=1'-0 SDT03308-5A

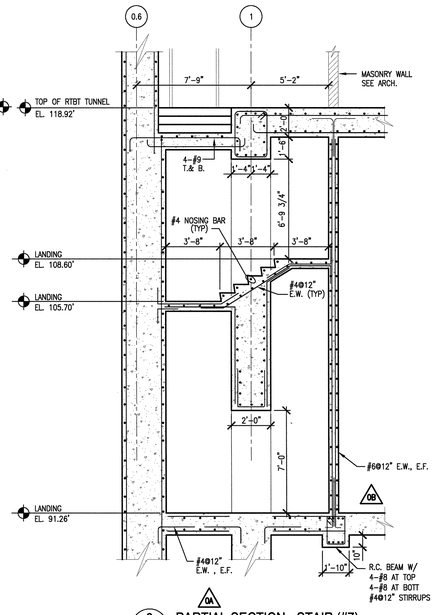

3 S2.02.42 PARTIAL SECTION - STAIR (#7)
SCALE 1/4"=1'-0 SDT03308-5A

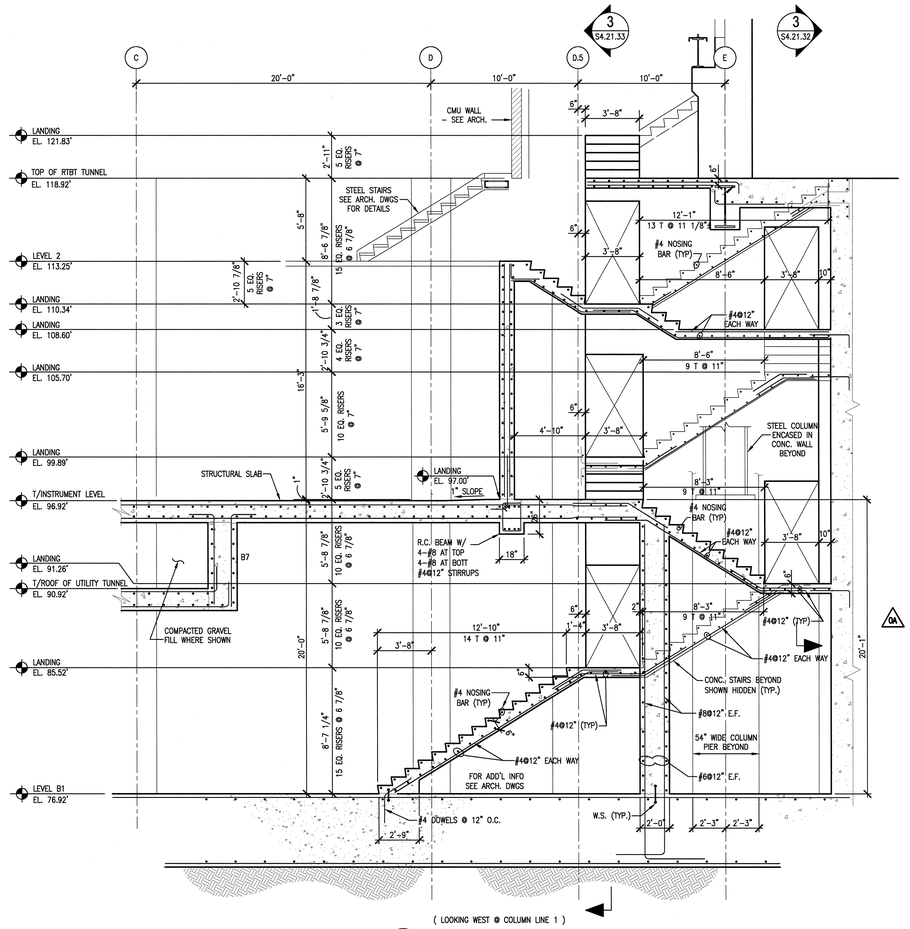

(LOOKING WEST @ COLUMN LINE 1)

2 S2.B1.43 S2.02.43 SECTION - STAIR #7
SCALE 1/4"=1'-0 SDT03308-5A

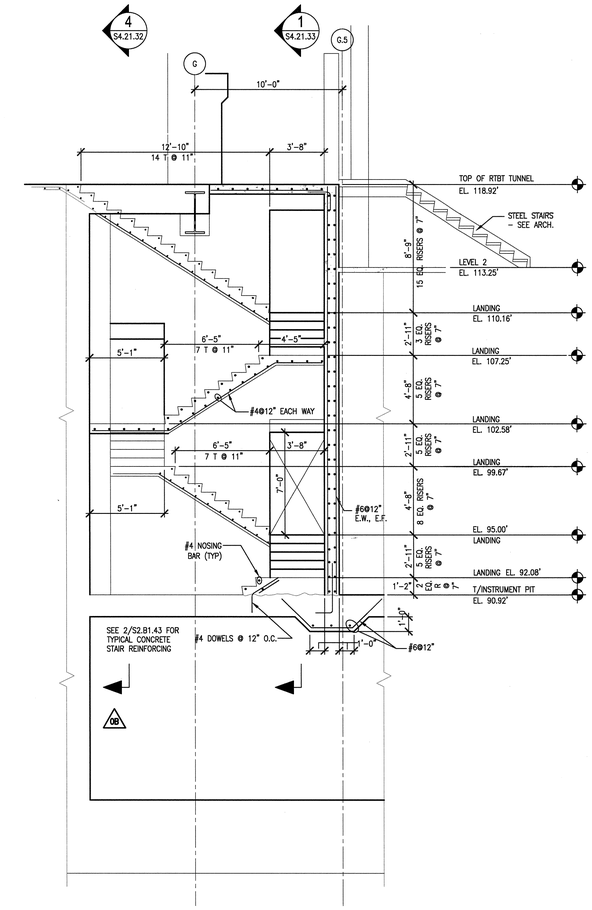

1 S2.01.41 SECTION - STAIR #8
SCALE 1/4"=1'-0

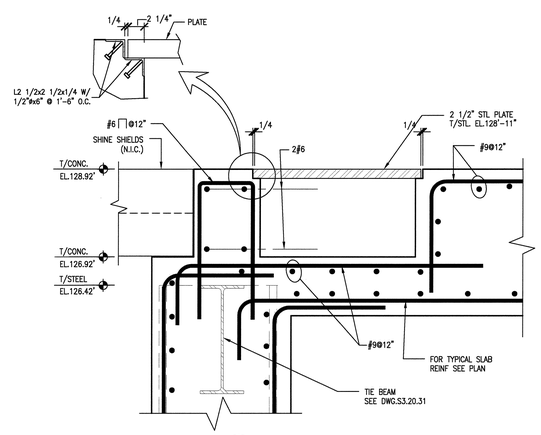

7 S2.03.42 SECTION
SCALE: 3/4" = 1'-0" SDT033016-5A

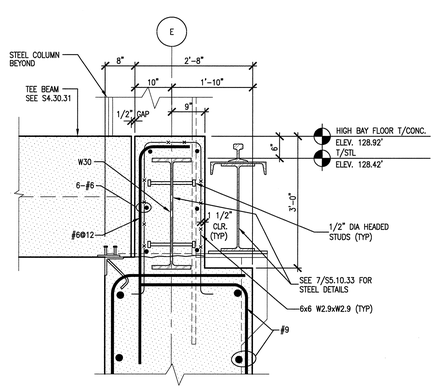

6 S4.20.32 REINFORCEMENT DETAIL
SCALE: 3/4" = 1'-0" SDT033016-5A

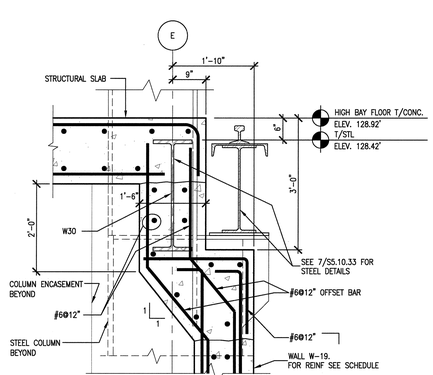

5 S4.20.33 REINFORCEMENT DETAIL
SCALE: 3/4" = 1'-0" SDT033016-5A

SCALE: 1/4" = 1'-0"

108030700-S8E-8700-A096

Knight Jacobs
Knight/Jacobs Joint Venture
701 Scarboro Road, MS 8253
Oak Ridge, TN 37830
865-241-9433
fax 865-241-3400

KNIGHT
Knight Advanced Technology
549 West Randolph Street
Chicago, IL 60661

NO REPRESENTATION OR WARRANTY, EXPRESSED OR IMPLIED, IS MADE AS TO THE ACCURACY, COMPLETENESS OR USEFULNESS OF THE INFORMATION OR STATEMENTS CONTAINED IN THESE DRAWINGS, OR THAT THE USE OR DISCLOSURE OF ANY INFORMATION, APPARATUS, METHOD, OR PROCESS DISCLOSED IN THESE DRAWINGS MAY NOT INFRINGE PRIVATE RIGHTS OF OTHERS. NO LIABILITY IS ASSUMED WITH RESPECT TO THE USE OF, OR FOR DAMAGES RESULTING FROM THE USE OF ANY INFORMATION, APPARATUS, METHOD, OR PROCESS DISCLOSED IN THESE DRAWINGS. DRAWINGS MADE AVAILABLE FOR INFORMATION TO BIDDER ARE NOT TO BE USED FOR OTHER PURPOSES AND ARE TO BE RETURNED UPON REQUEST OF THE FORWARDING CONTRACTOR.

NUMBER OF SECTION OR DETAIL
DRAWING ON WHICH SECTION OR DETAIL IS SHOWN OR TAKEN
SECTION AND DETAIL KEY

THIS DOCUMENT CONTROLLED BY
CHANGE CONTROL SYSTEM 3
ENGINEERING PROCEDURE SNS-ENG-G001

REV	CHANGE TYPE	CHANGE CONTROL SYSTEM	CHANGE REQUEST NUMBER	DESCRIPTION	DSN	CHK	DEPT
1				CERTIFIED FOR CONSTRUCTION – 10/26/01	GPR	REW	
0	A	3	1-13	DCN T-001 THRU T-013 – 9/21/01	GPR	REW	

REVISION OR ISSUE PURPOSE

DATE	PE	DATE	PJ	DATE	REQ	DATE	UTB	DATE	RPE	RPE NO	DATE
	CLG	10/03	RAD	10/02		JRL	10/02	JJB	23236	9/21/01	

REVISION APPROVALS

ST	CV	EC	EE	EM	IE	M	PD	SE	AR
REW		WRS	AK	WRS	BWJ		MP		ED
REW		WRS	RL	WRS	BWJ		MP		WAS

SQUAD CHECK

RPE
JOHN BUSCH REGISTERED ENGINEER NO. 23236 STATE OF TENNESSEE
REV. 1 DATE 11/13/01

DSN	G. REDDY	9/21/01
DRW	T. DEADY	9/21/01
CHK	R.WALKINGTON	9/21/01
DEPT		
PE	C.L. GARREN	10/3/01
PJ	R. DEAN	10/2/01
REQ		
UTB	J. LAWSON	10/2/01

DRAWING APPROVALS

UT-BATTELLE
Oak Ridge National Laboratory
managed for the DEPARTMENT OF ENERGY under
U.S. GOVERNMENT contract DE-AC05-00OR22725
UT-BATTELLE, LLC, ◇ Oak Ridge, Tennessee

PROJECT NAME:
SPALLATION NEUTRON SOURCE

TARGET BUILDING
SECTIONS AND DETAILS

1 3	48 S	49 X	50 X	PLANT 8	BLDG 8700	FL	SH. 1	OF 1	TYPE S	CLASS U
51 NC		52 NA		53	WBS 1.8.3.7		S4.21.32			REV 1

Date: 11/13/2001 Time: 14:44:12
Username: BARDOLNOC
DN=C,O=US,OU=PROJECTS,OU=SNS,OU=ENGINEERING,OU=SNS_SAFING_PLOTS,CN=21-3D.DWG