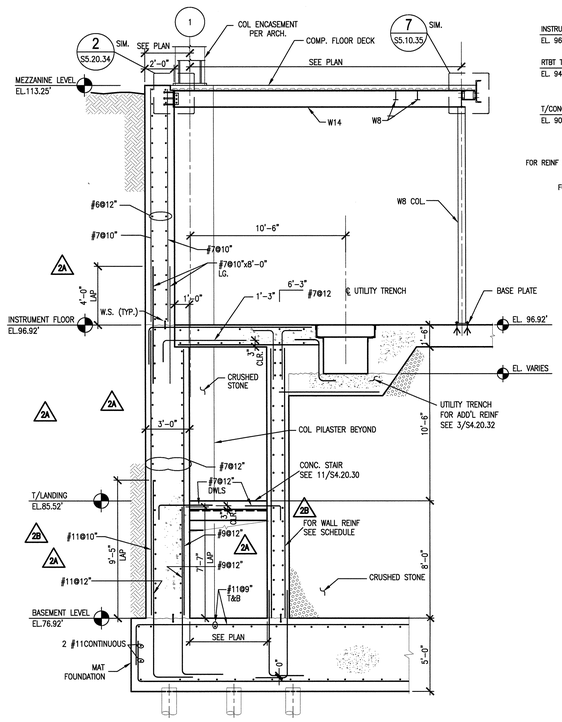

7 SECTION
S1.FP.30 SCALE : 1/4"=1'-0" SSC012-5A
S2.B1.43
S4.20.36
S2.01.43

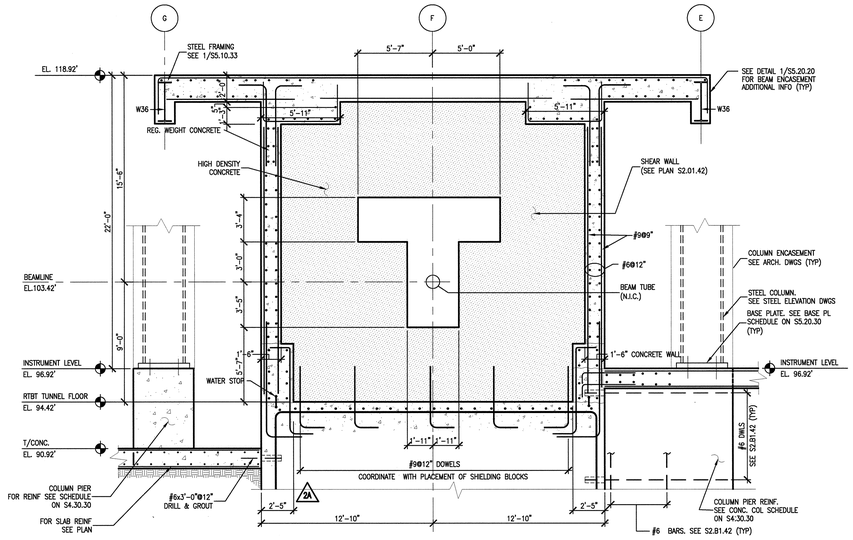

5 SECTION AT RTBT TUNNEL @ SHEAR WALL
S2.01.42 SCALE: 1/4"=1'-0" SSC007-5A
S2.B1.42

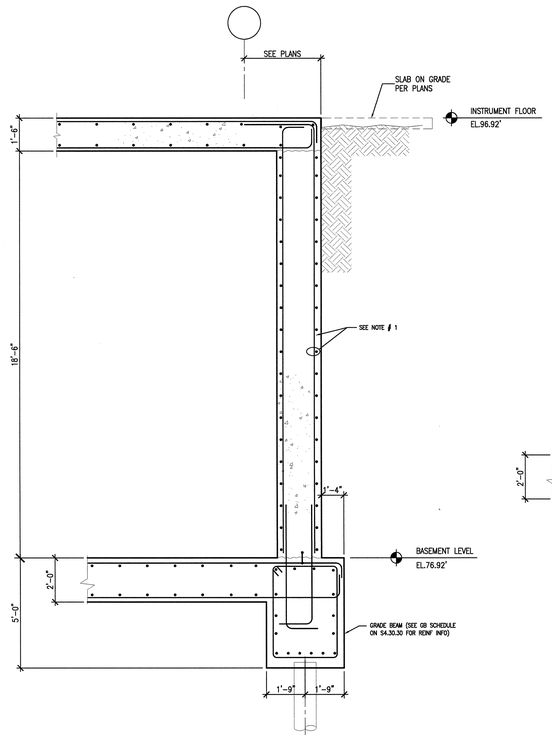

3 SECTION @ EXTERIOR WALL & EXT. GRADE BEAM
S1.FP.30 SCALE : 3/8"=1'-0" SSC003-5A
S2.B1.47 S2.02.49
S2.B1.49
S2.B1.44
S2.B1.46

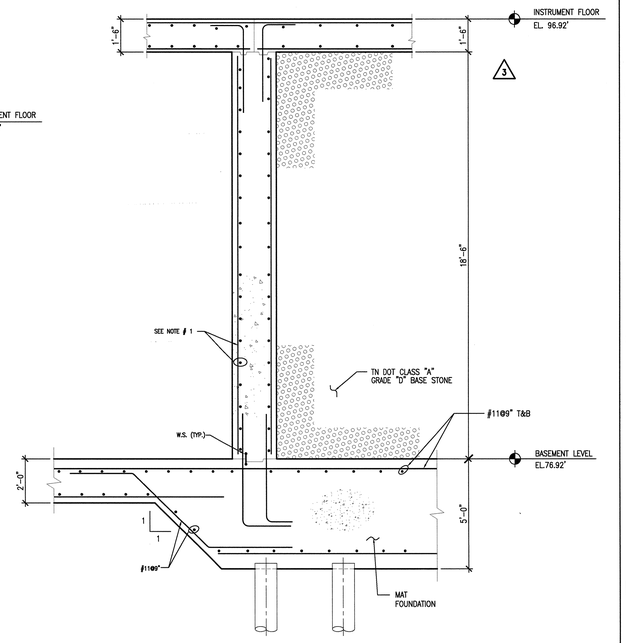

1 SECTION
S1.FP.30 SCALE : 3/8"=1'-0" SSC003-5A
S2.01.44 S2.01.46
S2.B1.44 S2.B1.46

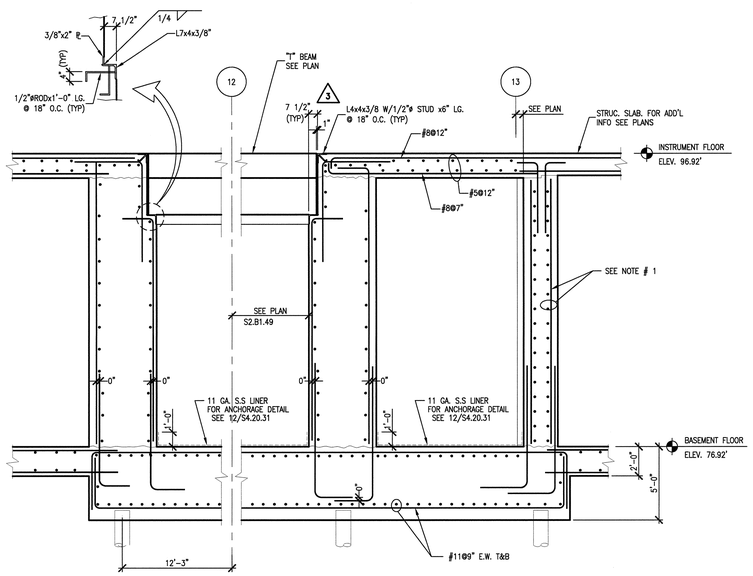

6 SECTION THRU LLLW
S2.B1.49 SCALE: 1/4"=1'-0" SSC007-5A
S1.FP.30
S2.01.46

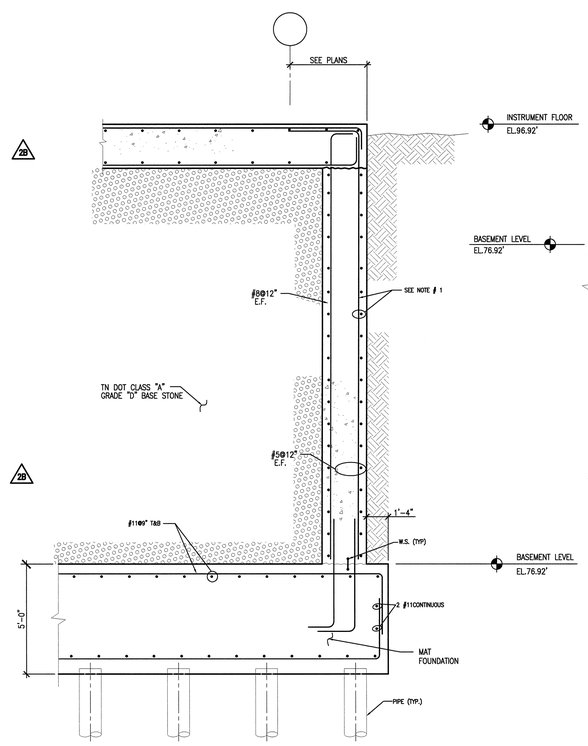

4 SECTION @ EXTERIOR WALL
S1.FP.30 SCALE : 3/8"=1'-0" SSC003-5A
S2.B1.41
S2.B1.43
S2.B1.44
S2.B1.46

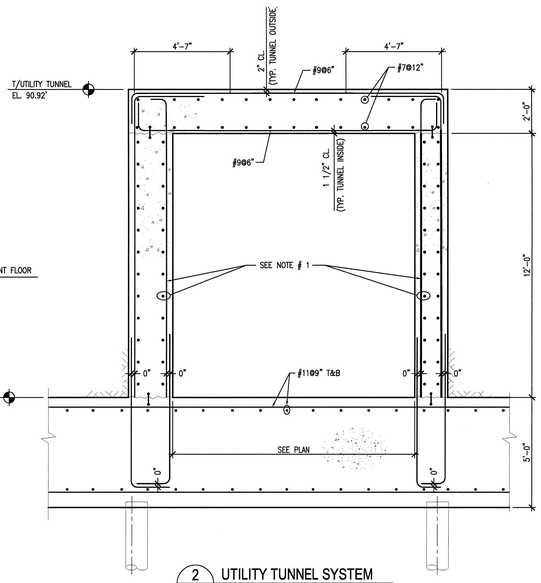

2 UTILITY TUNNEL SYSTEM
S1.FP.30 SCALE : 3/8"=1'-0" SSC003-5A
S2.B1.43
S1.B1.31
S4.20.34

NOTES:

1. SEE WALL SCHEDULE ON S4.30.30 FOR WALL THICKNESS & WALL REINFORCEMENT.
2. SEE PLAN FOR INSTRUMENT FLOOR BASEMENT SLAB REINFORCEMENT.

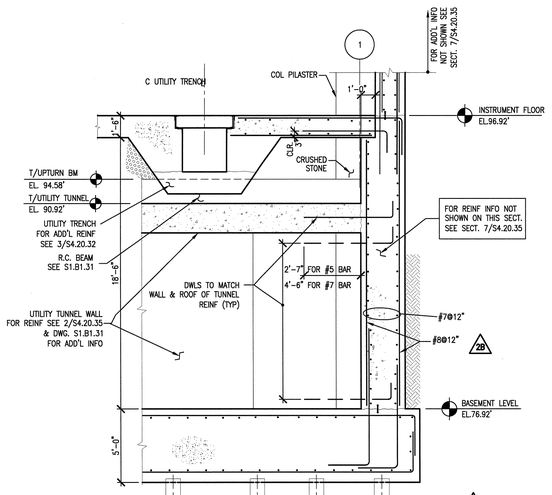

8 SECTION
S2.01.43 SCALE : 1/4"=1'-0" SSC012-5A
S2.B1.43

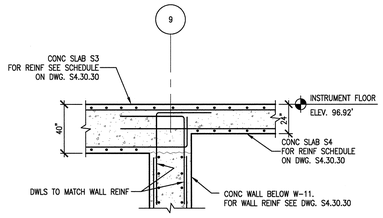

9 SECTION
S2.01.45 SCALE: 1/4"=1'-0" SDT033005-5A

SCALE: 1/4" = 1'-0"

SCALE: 3/8" = 1'-0"

108030700-S8E-8700-A006

Knight Jacobs

Knight/Jacobs Joint Venture
701 Scarboro Road, MS 8253
Oak Ridge, TN 37830
865-241-9433
fax 865-241-3400

KNIGHT
Knight Advanced Technology
549 West Randolph Street
Chicago, IL 60661

DSN	G. REDDY	10/13/00
DRW	G.MARSZALEK	10/13/00
CHK	R.WALKINGTON	10/13/00
DEPT		
PE	C.L. GARREN	10/24/00
PJ	R. DEAN	10/24/00
REQ		
UTB	J. LAWSON	10/24/00

RPE
JOHN BUSCH REGISTERED ENGINEER AGRICULTURE No. 22336 STATE OF TENNESSEE
REV. 3 DATE 11/13/01
DRAWING APPROVALS

UT-BATTELLE
Oak Ridge National Laboratory
managed for the DEPARTMENT OF ENERGY under U.S. GOVERNMENT contract DE-AC05-00OR22725
UT-BATTELLE, LLC. + Oak Ridge, Tennessee

PROJECT NAME:
SPALLATION NEUTRON SOURCE

TARGET BUILDING
BASEMENT WALLS
CONCRETE SECTIONS

1	48	49	50	PLANT	BLDG	FL	SH.	OF	TYPE	CLASS
3	S	X	X	8	8700		1	1	S	U
51		52		53	WBS		S4.20.35			REV
NC		NA			1.8.3.7					3

REV	CHANGE TYPE	CHANGE CONTROL SYSTEM	CHANGE REQUEST NUMBER	DESCRIPTION	DSN	CHK	DEPT	DATE	PE	DATE	PJ	DATE	REQ	DATE	UTB	DATE	RPE	RPE NO	DATE	ST	CV	EC	EE	EM	IE	M	PD	SE	AR
3				CERTIFIED FOR CONSTRUCTION – 10/26/01	GPR	REW														REW		WRS	AK	WRS	BWJ		MP		ED
2	A	3	1-13	DCN T-001 THRU T-013 – 9/21/01	GPR	REW			CLG	10/03	RAD	10/02			JRL	10/02	JJB	23236	9/21/01	REW	–	WRS	RL	WRS	BWJ	–	MP	–	WAS
1				SUBSTRUCTURES CERTIFIED FOR CONSTRUCTION – 4/18/01	GPR	REW			CLG	4/18	RAD	4/18			JRL	4/19	JJB	23236	4/17/01	SC		WRS	RL	WRS	BWJ		MP		WAS
0				PILES CERTIFIED FOR CONSTRUCTION – 10/13/00	GPR	REW			CLG	–	–	–			JRL	10/24	JJB	23236	10/13/00										

REVISION OR ISSUE PURPOSE — REVISION APPROVALS — SQUAD CHECK

NO REPRESENTATION OR WARRANTY, EXPRESSED OR IMPLIED, IS MADE AS TO THE ACCURACY, COMPLETENESS OR USEFULNESS OF THE INFORMATION OR STATEMENTS CONTAINED IN THESE DRAWINGS, OR THAT THE USE OR DISCLOSURE OF ANY INFORMATION, APPARATUS, METHOD, OR PROCESS DISCLOSED IN THESE DRAWINGS MAY NOT INFRINGE PRIVATE RIGHTS OF OTHERS. NO LIABILITY IS ASSUMED WITH RESPECT TO THE USE OF, OR FOR DAMAGES RESULTING FROM THE USE OF ANY INFORMATION, APPARATUS, METHOD, OR PROCESS DISCLOSED IN THESE DRAWINGS. DRAWINGS MADE AVAILABLE FOR INFORMATION TO BIDDER ARE NOT TO BE USED FOR OTHER PURPOSES AND ARE TO BE RETURNED UPON REQUEST OF THE FORWARDING CONTRACTOR.

NUMBER OF SECTION OR DETAIL
DRAWING ON WHICH SECTION OR DETAIL IS SHOWN OR TAKEN
SECTION AND DETAIL KEY

THIS DOCUMENT CONTROLLED BY
CHANGE CONTROL SYSTEM 3
ENGINEERING PROCEDURE SNS-ENG-G001

Date: 11/13/2001 Time: 14:44:27
Drawing: W:\SPSN\PROD\700\700_CAD\700A_S8\740_PLOT\S4-20-35.DWG
AutoCAD