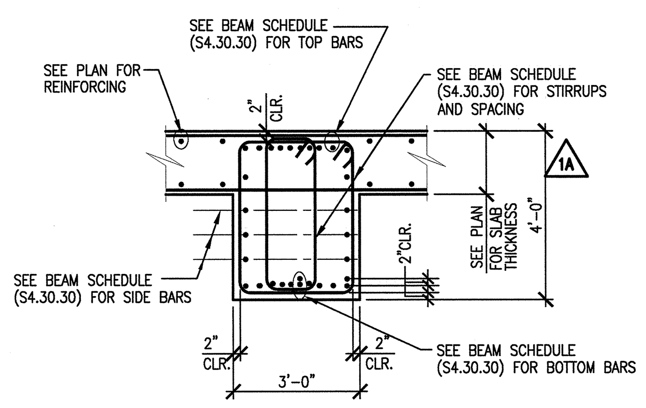

13 **BEAM 2 SECTION**
S2.01.44 SCALE : 3/8"=1'-0" SDT03309-5A
S2.01.46
S2.01.47
S2.01.48
S2.01.49

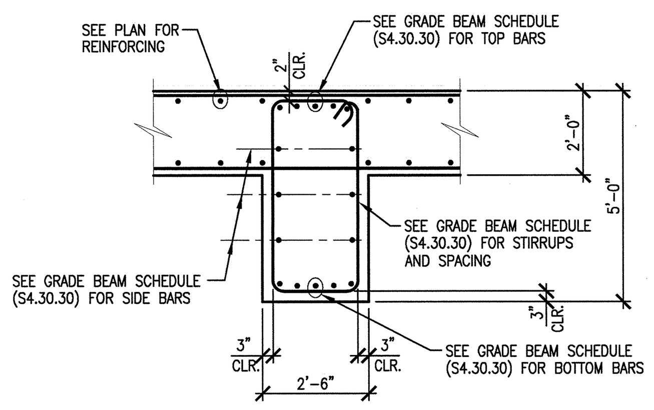

9 **GRADE BEAM 1 SECTION**
S2.B1.44 SCALE : 3/8"=1'-0" SDT03309-5A
S2.B1.46
S2.B1.47
S2.B1.48
S2.B1.49

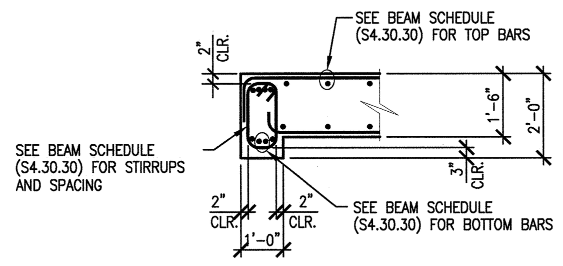

14 **BEAM 3 SECTION**
S2.01.49 SCALE : 3/8"=1'-0" SDT03309-5A

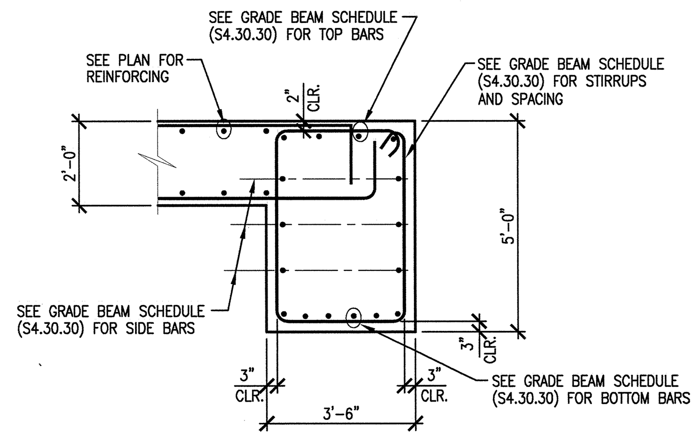

10 **GRADE BEAM 2 SECTION**
S2.B1.44 SCALE : 3/8"=1'-0" SDT03309-5A
S2.B1.46
S2.B1.47
S2.B1.48
S2.B1.49

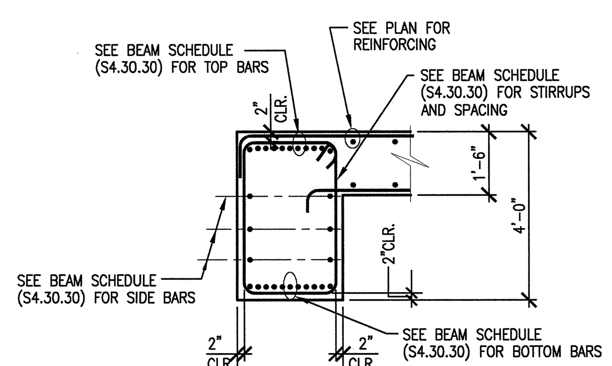

15 **BEAM 4 SECTION**
S2.01.49 SCALE : 3/8"=1'-0" SDT03309-5A
S2.01.47

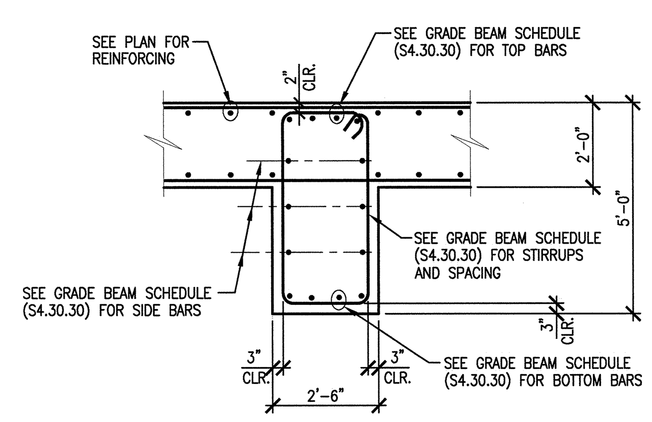

11 **GRADE BEAM 3 SECTION**
S2.B1.48 SCALE : 3/8"=1'-0" SDT03309-5A

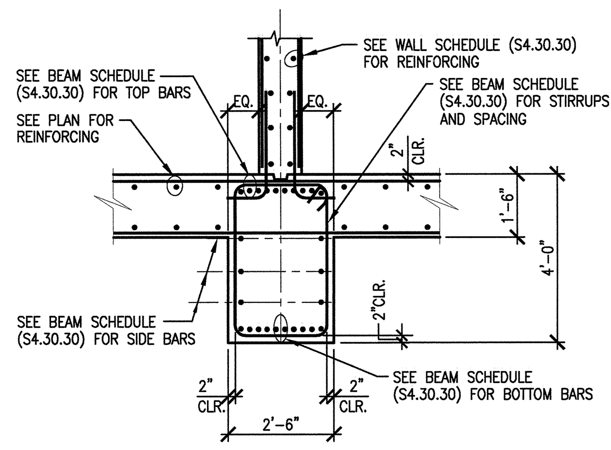

16 **BEAM 5 SECTION**
S2.01.44 SCALE : 3/8"=1'-0" SDT03309-5A

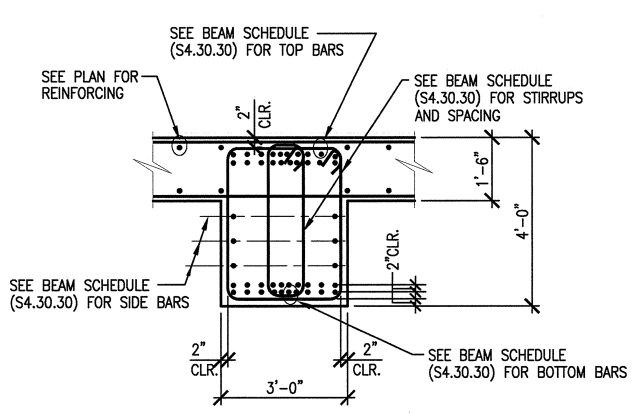

12 **BEAM 1 SECTION**
S2.01.44 SCALE : 3/8"=1'-0" SDT03309-5A
S2.01.45
S2.01.46
S2.01.47
S2.01.48
S2.01.49

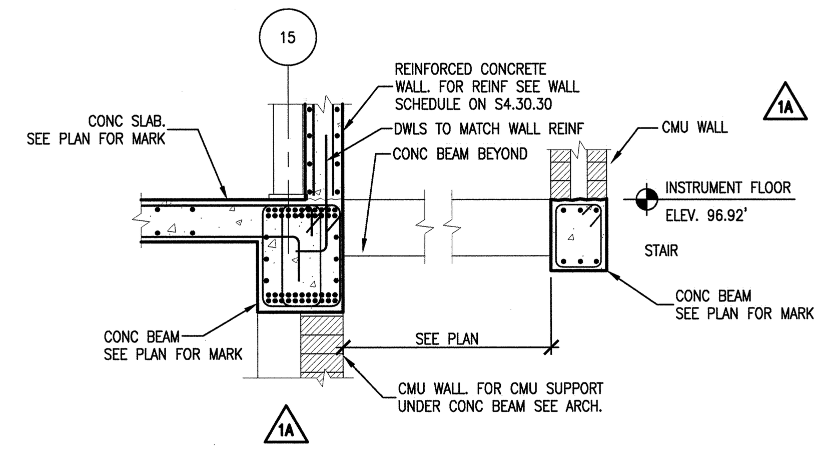

3 **SECTION**
S2.01.48 SCALE: 1/4"=1'-0" SSC007-5A

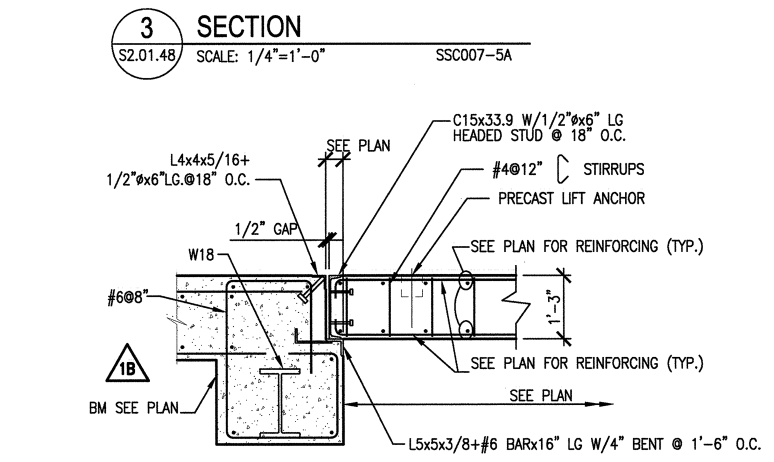

NOTE: PROVIDE DAYTON SUPERIOR SWIFT LIFT SYSTEM WITH 4 ANCHORS PER PANEL. TYPE P-52 SL STAINLESS STEEL ANCHOR, 4 TON RATED LOAD CAPACITY, 14 INCHES LONG PROVIDE 5 UNIVERSAL LIFTING EYES, TYPE P-50 SL.

5 **SECTION**
S2.01.48 SCALE: 3/8"=1'-0" SDT033015-5A
S2.01.45

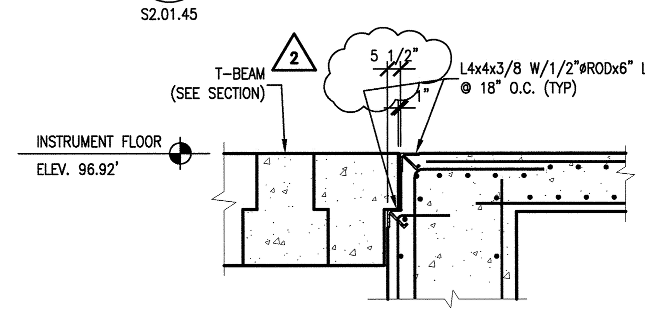

6 **SECTION THRU LLLW**
S2.01.49 SCALE: 1/4"=1'-0" SSC007-5A

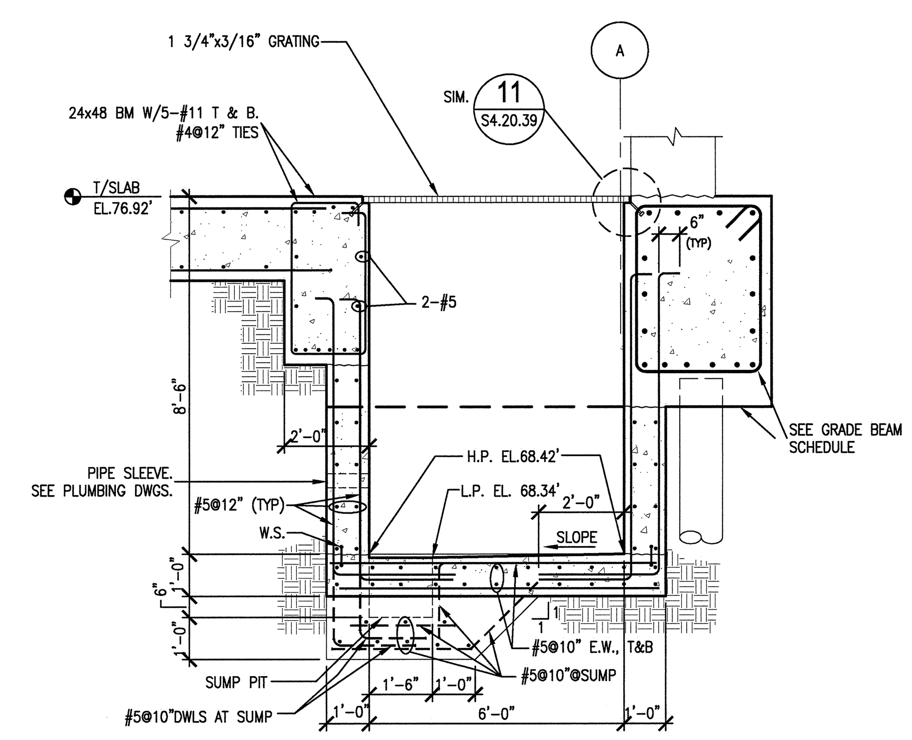

7 **SEWAGE EJECTOR PIT**
S2.B1.49 SCALE : 3/8"=1'-0" SDT03309-5A
S1.FP.30
S1.FP.31

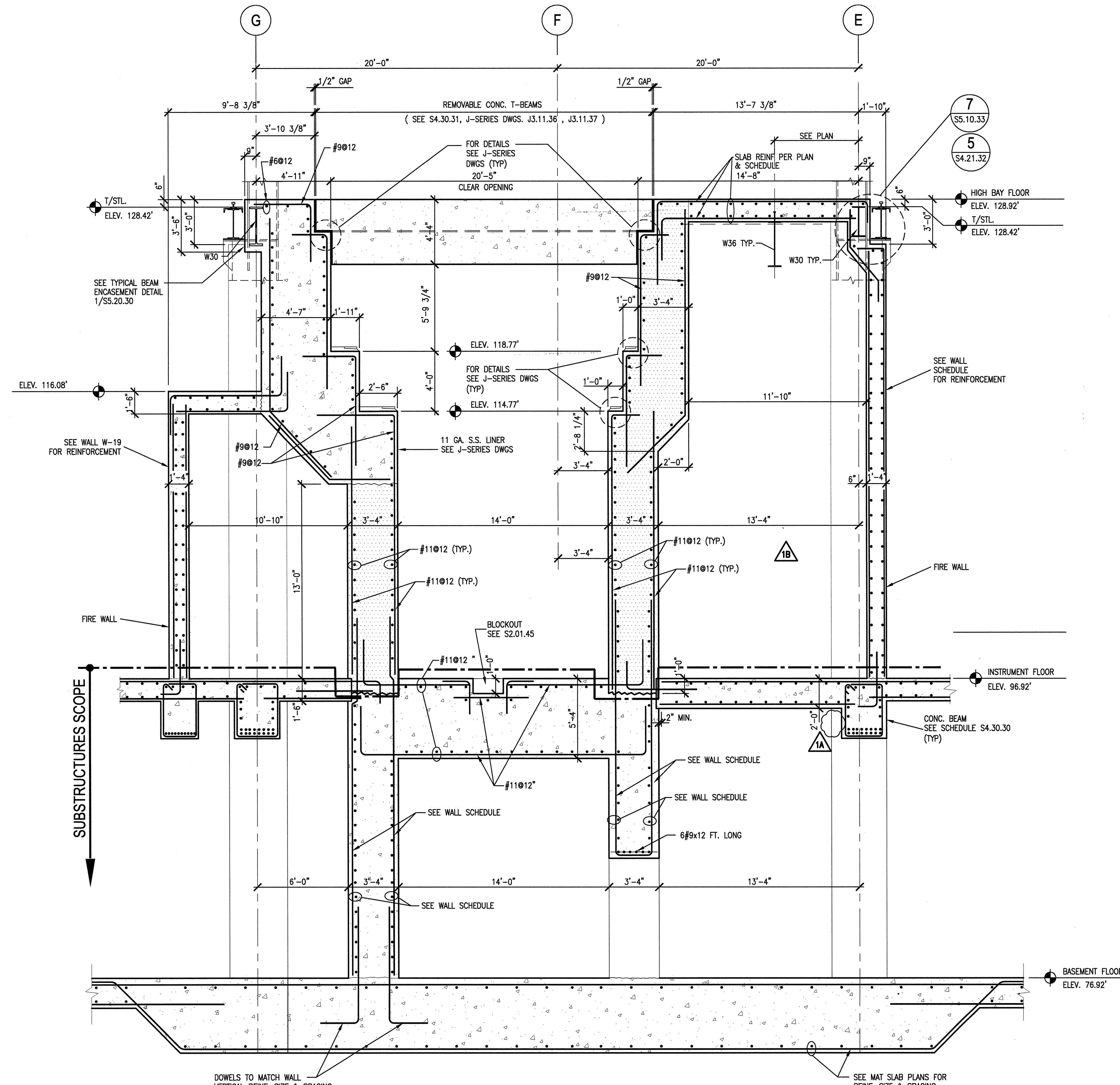

1 **SECTION AT HOT CELL WALLS**
S2.B1.45 SCALE: 1/4"=1'-0" SSC002-5A
S2.B1.42

NOTES: 1. (*) – INDICATES DIMENSIONS TO BE VERIFIED WITH MERRICK DWGS.
2. SEE WALL SCHEDULE ON DWG. S4.30.30 FOR WALL REINF.

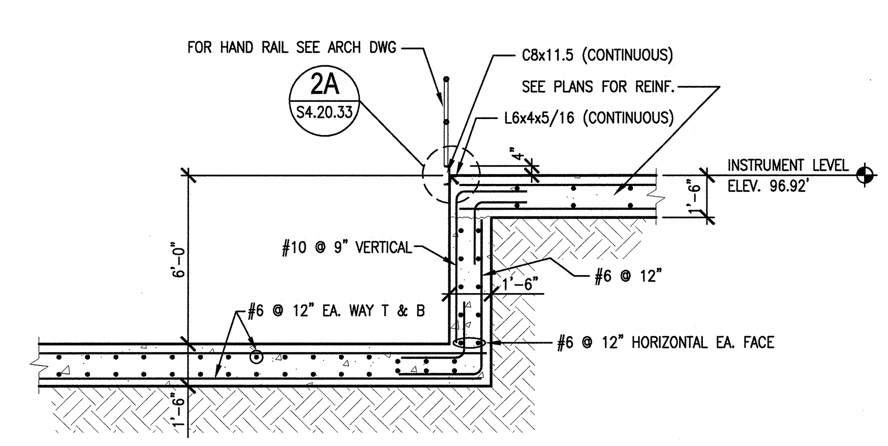

2 **SECTION**
S2.01.41 SCALE: 1/4"=1'-0" SSC002-5A

LEGEND
– HIGH DENSITY CONCRETE (245 PCF)
– UNLESS NOTED OTHERWISE ALL CONCRETE IS REGULAR WEIGHT (145 PCF)

4' 2' 0 4' 8'
SCALE: 1/4" = 1'-0"

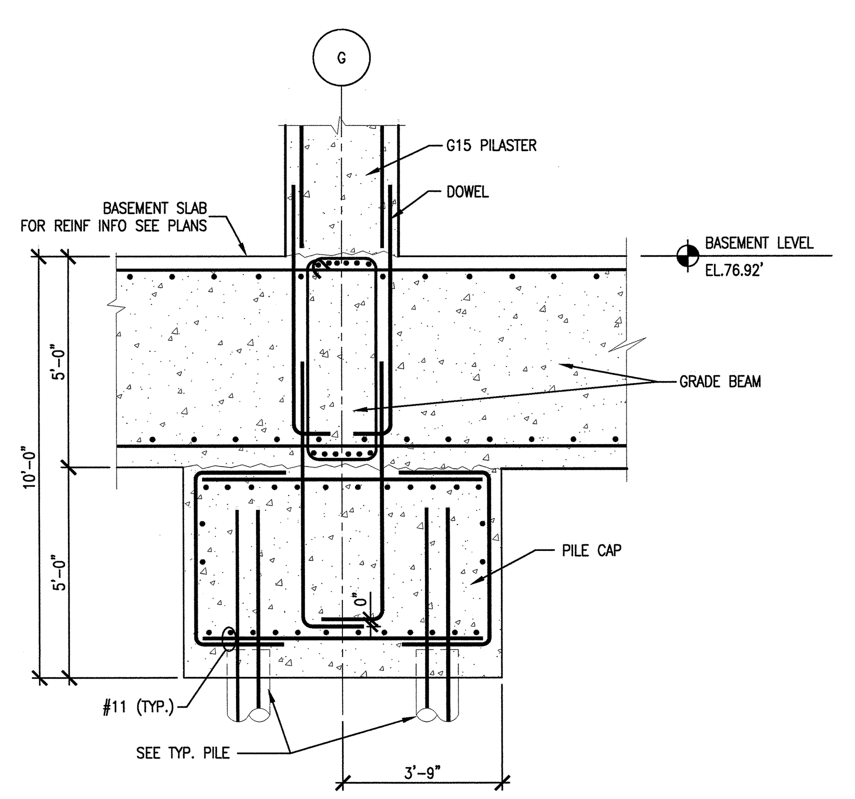

18 **SECTION THRU G15 PILE CAP**
S2.B1.48 SCALE : 3/8"=1'-0" SDT03309-5A

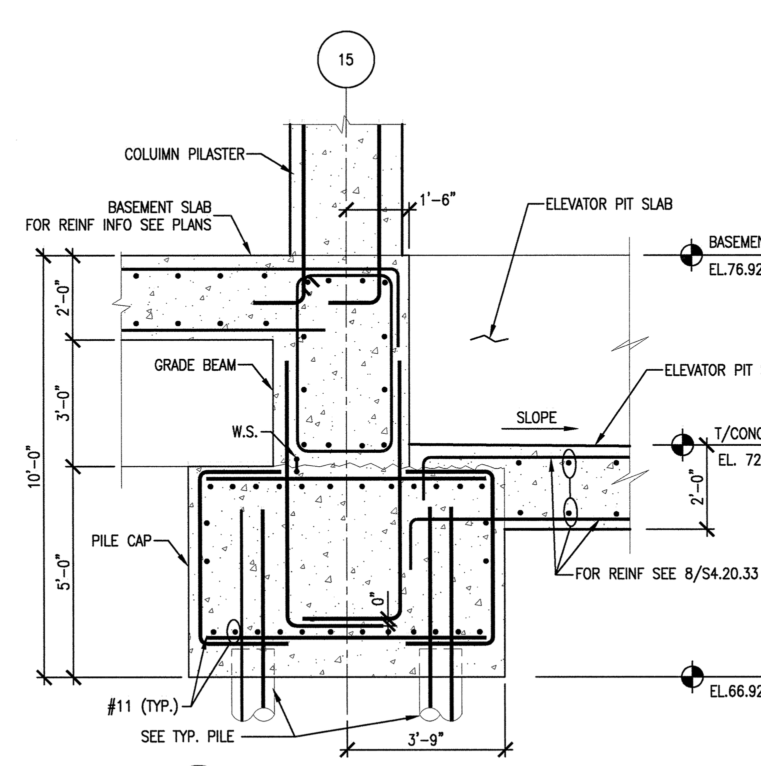

17 **SECTION**
S4.20.33 SCALE : 3/8"=1'-0" SDT03309-5A

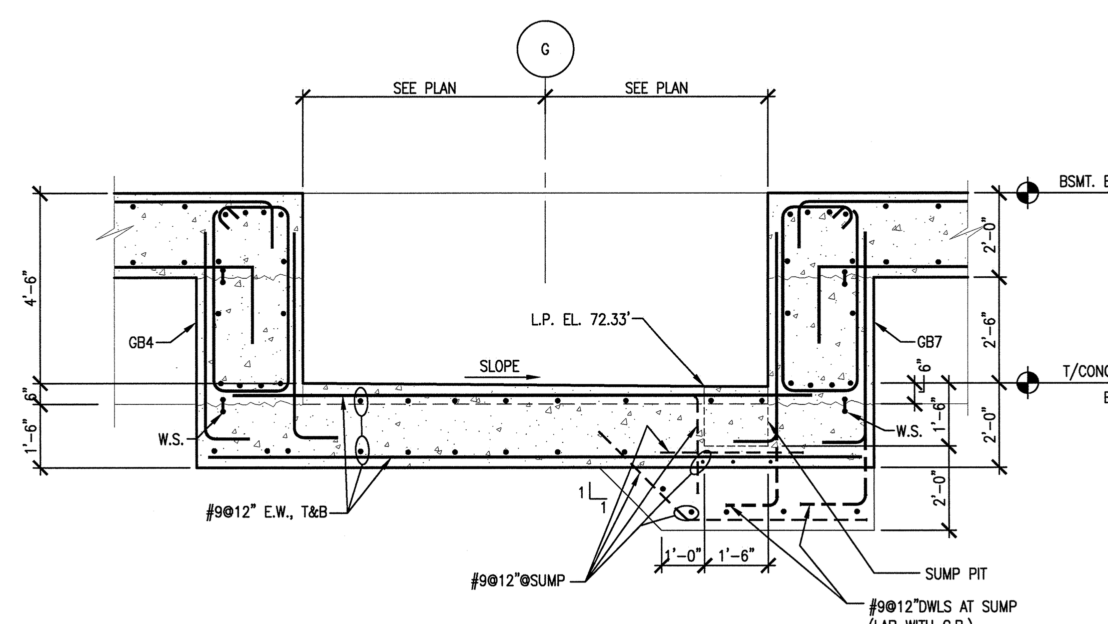

8 **CABLE ELEVATOR PIT**
S2.B1.48 SCALE : 3/8"=1'-0" SDT03309-5A
S2.B1.47
S1.FP.30

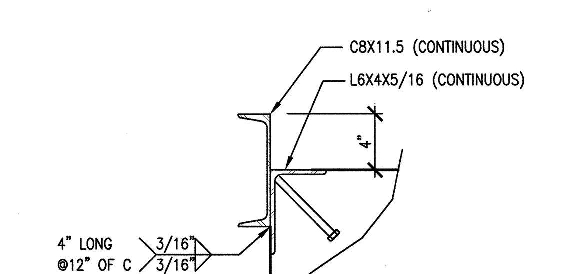

2A **DETAIL**
S4.20.33 SCALE: 1 1/2"=1'-0" SDT033001-5A

NO REPRESENTATION OR WARRANTY, EXPRESSED OR IMPLIED, IS MADE AS TO THE ACCURACY, COMPLETENESS OR USEFULNESS OF THE INFORMATION OR STATEMENTS CONTAINED IN THESE DRAWINGS, OR THAT THE USE OR DISCLOSURE OF ANY INFORMATION, APPARATUS, METHOD, OR PROCESS DISCLOSED IN THESE DRAWINGS MAY NOT INFRINGE PRIVATE RIGHTS OF OTHERS. NO LIABILITY IS ASSUMED WITH RESPECT TO THE USE OF, OR FOR DAMAGES RESULTING FROM THE USE OF ANY INFORMATION, APPARATUS, METHOD, OR PROCESS DISCLOSED IN THESE DRAWINGS. DRAWINGS MADE AVAILABLE FOR INFORMATION TO BIDDER ARE NOT TO BE USED FOR OTHER PURPOSES AND ARE TO BE RETURNED UPON REQUEST OF THE FORWARDING CONTRACTOR.

SECTION AND DETAIL KEY: NUMBER OF SECTION OR DETAIL / DRAWING ON WHICH SECTION OR DETAIL IS SHOWN OR TAKEN

THIS DOCUMENT CONTROLLED BY
CHANGE CONTROL SYSTEM 3
ENGINEERING PROCEDURE SNS-ENG-G001

REV	CHANGE TYPE	CHANGE CONTROL SYSTEM	CHANGE REQUEST NUMBER	DESCRIPTION	DSN	CHK	DEPT	DATE	PE	DATE	PJ	DATE	REQ	DATE	UTB	DATE	RPE	RPE NO	DATE	ST	CV	EC	EE	EM	IE	M	PD	SE	AR
2				CERTIFIED FOR CONSTRUCTION – 10/26/01	GPR	REW			[signature]	11/13/01	RAD	11/14/01			[signature]	11/14/01	JJB	23236	11/13/01	REW		WRS	AK	WRS	BWJ		MP		ED
1	A	3	1-13	DCN T-001 THRU T-013 – 9/21/01	GPR	REW			CLG	10/03	RAD	10/02			JRL	10/02	JJB	23236	9/21/01	REW		WRS	RL	WRS	BWJ		MP		WAS
0				SUBSTRUCTURES CERTIFIED FOR CONSTRUCTION – 4/18/01	GPR	REW			CLG	4/18	RAD	4/18			JRL	4/19	JJB	23236	4/17/01	SC		WRS	RL	WRS	BWJ		MP		WAS

REVISION OR ISSUE PURPOSE — REVISION APPROVALS — SQUAD CHECK

RPE: JOHN BUSCH REGISTERED ENGINEER AGRICULTURE COMMERCE NO. 23236 STATE OF TENNESSEE
REV. 2 DATE 11/13/01

DRAWING APPROVALS		
DSN	G. REDDY	4/17/01
DRW	G.MARSZALEK	4/17/01
CHK	R.WALKINGTON	4/17/01
DEPT		
PE	C. GARREN	4//18/01
PJ	R. DEAN	4//18/01
REQ		
UTB	J. LAWSON	4/19/01

108030700-S8E-8700-A079

Knight/Jacobs Joint Venture
701 Scarboro Road, MS 8253
Oak Ridge, TN 37830
865-241-9433
fax 865-241-3400

KNIGHT
Knight Advanced Technology
549 West Randolph Street
Chicago, IL 60661

UT-BATTELLE
Oak Ridge National Laboratory
managed for the DEPARTMENT OF ENERGY under U.S. GOVERNMENT contract DE-AC05-00OR22725
UT-BATTELLE, LLC, Oak Ridge, Tennessee

PROJECT NAME:
SPALLATION NEUTRON SOURCE

TARGET BUILDING
HOT CELL WALLS
CONCRETE SECTIONS

1	48	49	50	PLANT	BLDG	FL	SH.	OF	TYPE	CLASS
3	S	X	X	8	8700		1	1	S	U
51	52		53		WBS					REV
NC	NA				1.8.3.7	S4.20.33				2

Date: 11/13/2001 Time: 14:45:53
Username: MARSZALEKGJ
CHI-F_VOL2:PROJECTS\7000\700_CADD\TASK_5A\740_PLOT\S4-20-33.DWG

AutoCAD