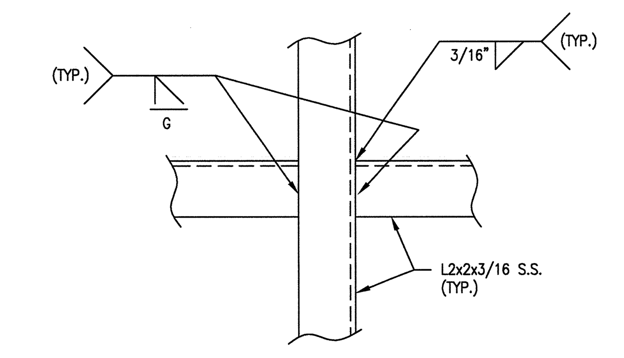

15 TYPICAL WELD BETWEEN BACKING ANGLES
S4.20.31 SCALE: NONE SDT033001-5A

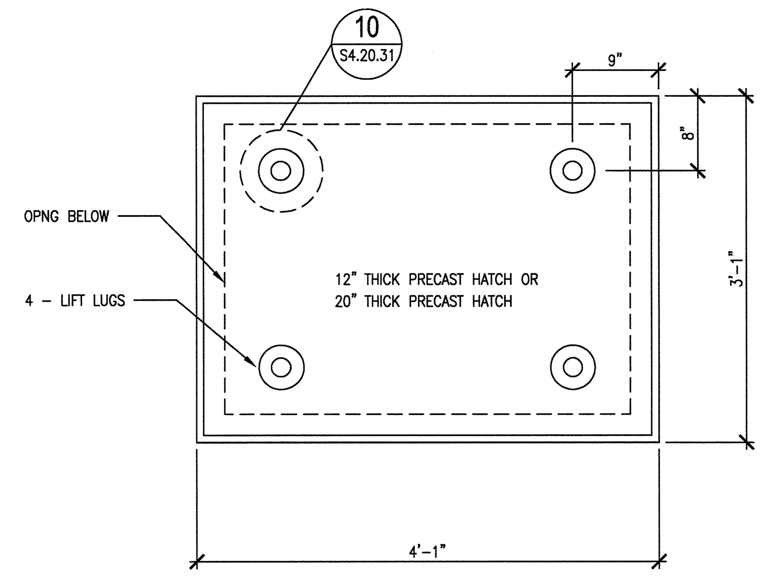

11 TYPICAL PRECAST COVER PLAN
S4.20.31 SCALE: 1"=1'-0" SDT03306-5A
S2.B1.44
S2.B1.46

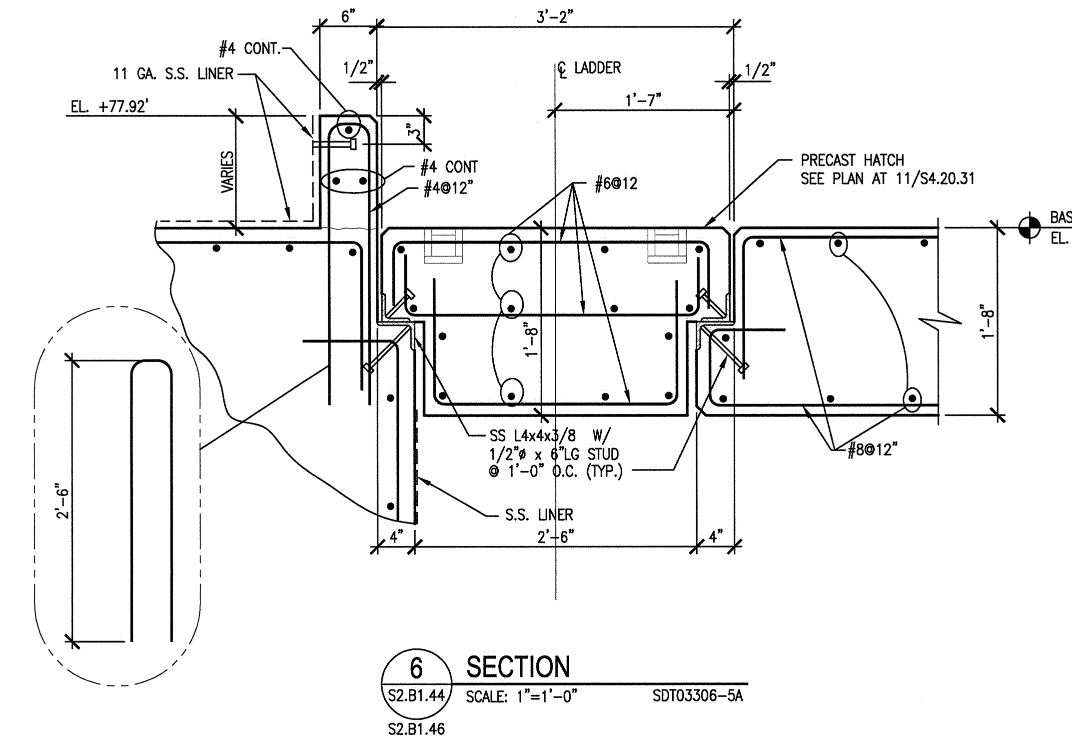

6 SECTION
S2.B1.44 SCALE: 1"=1'-0" SDT03306-5A
S2.B1.46

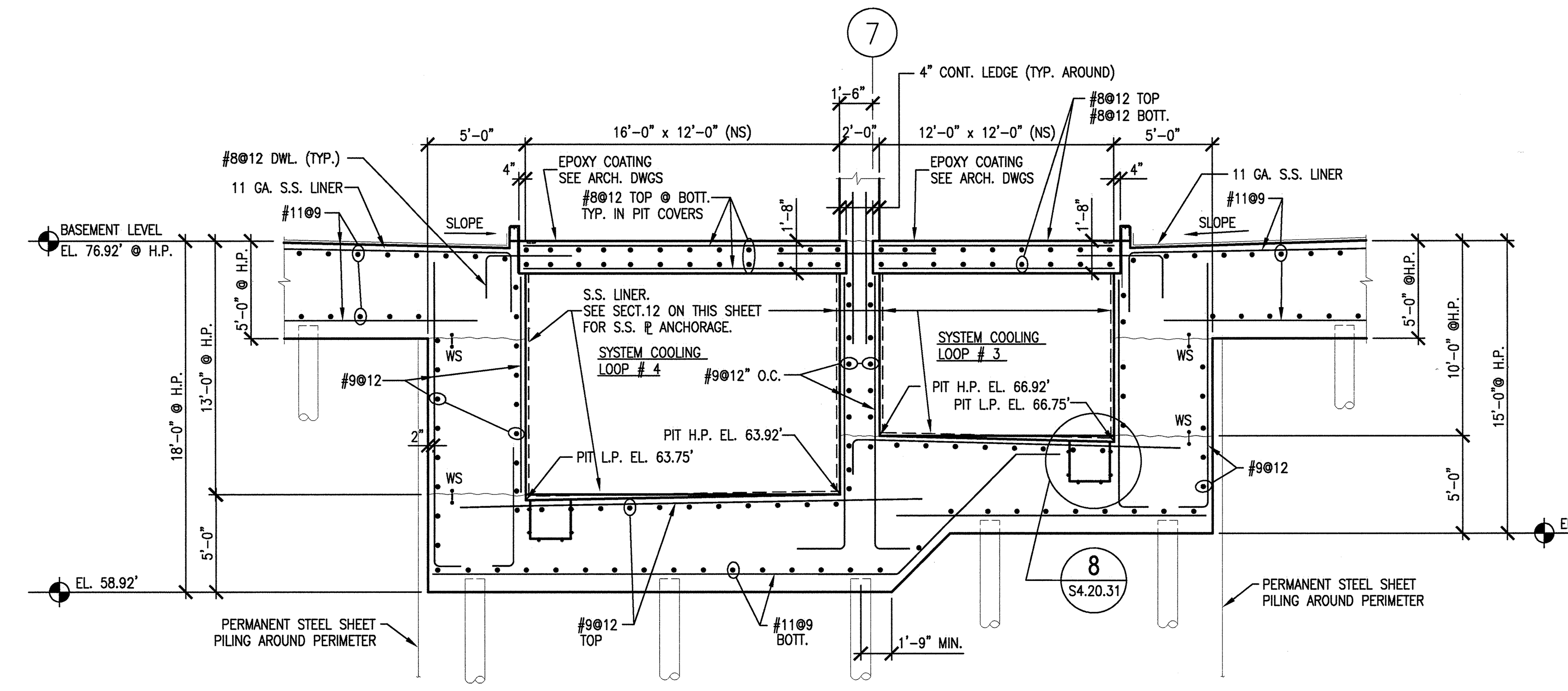

1 SECTION
S2.B1.46 SCALE : 3/16"=1'-0" SSC0010-5A
S1.FP.30
S1.FP.31

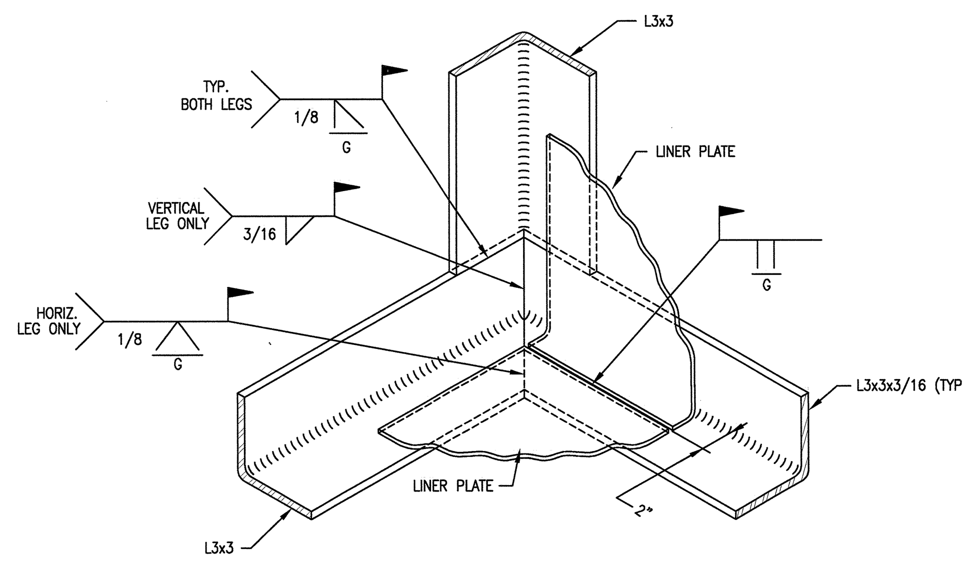

16 TYPICAL CORNER SECTION @ FLOOR & BASE OF WALLS
S4.20.31 SCALE: NONE SDT033001-5A

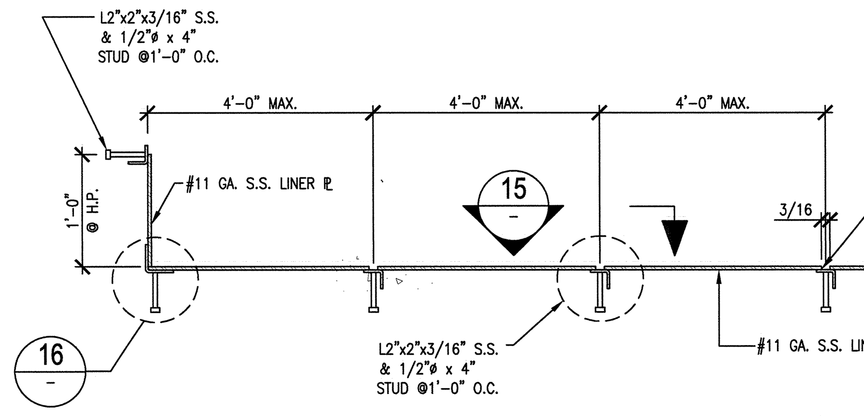

SEE LINER PLATE NOTES A & B
SEE SECTION 17 FOR SUPPORT SYSTEM

12 TYPICAL SECTION
S2.B1.41 SCALE: 1"=1'-0" SDT03306-5A
S4.20.36
S4.20.65
S4.20.31

NOTE: ALL S.S. LINERS ARE TO BE PROVIDED BY THIS CONTRACTOR EXCEPT THOSE SPECIFICALLY SHOWN TO BE SNS.

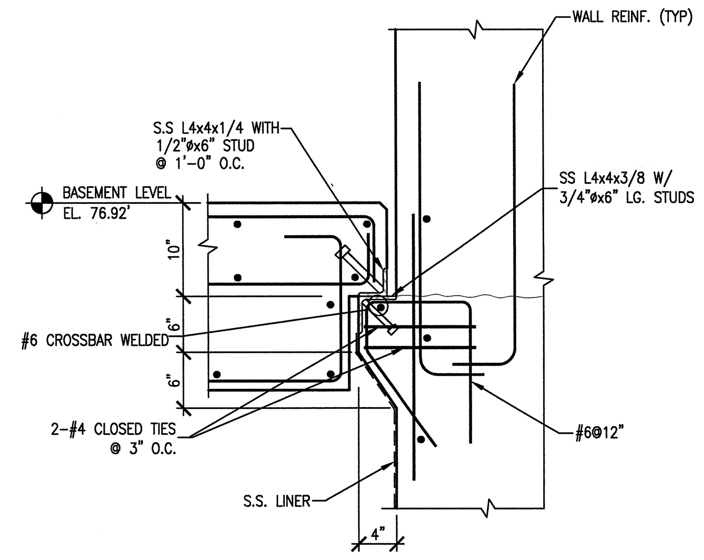

7 SECTION
S2.B1.44 SCALE: 1"=1'-0" SDT03306-5A
S2.B1.46

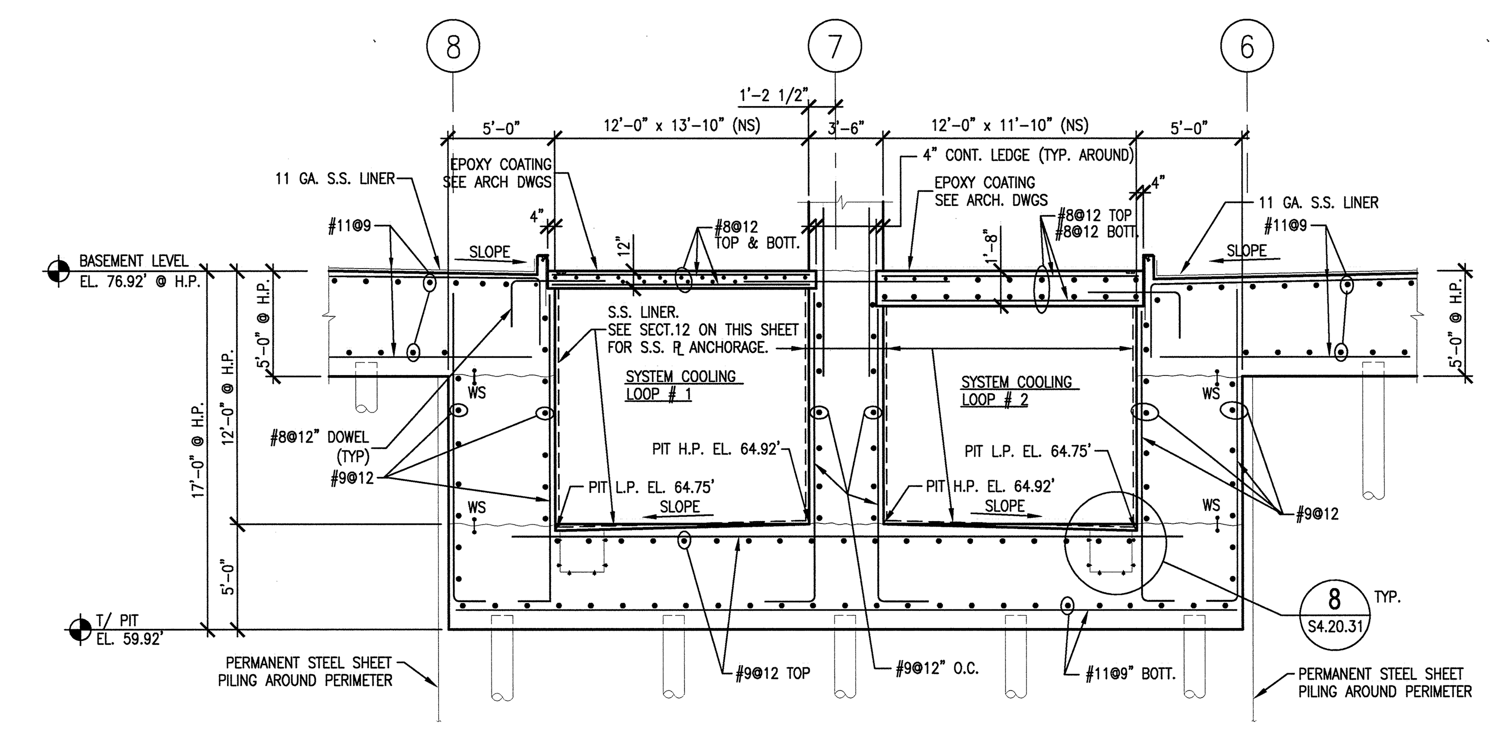

2 SECTION
S2.B1.44 SCALE : 3/16"=1'-0" SSC0010-5A
S1.FP.30
S1.FP.31

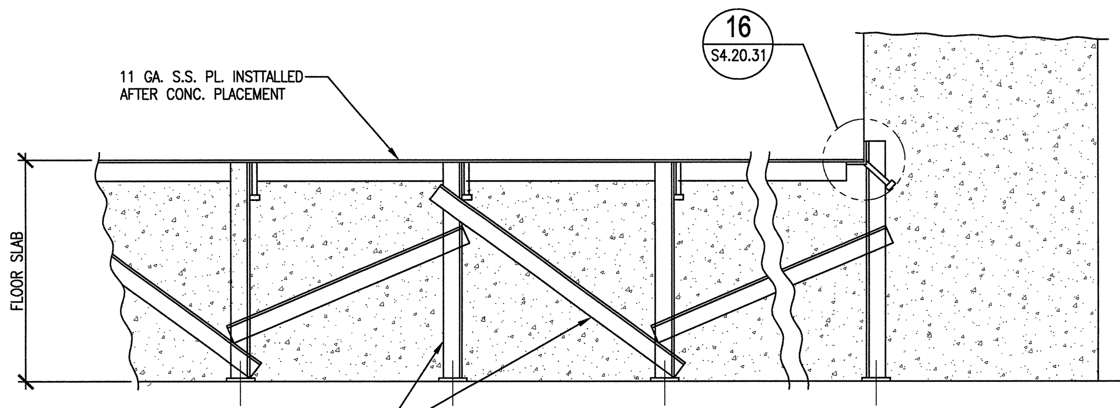

17 SECTION SUPPORT SYSTEM FOR FLOOR EMBEDMENTS
S4.20.31 SCALE: NONE SDT03306-5A

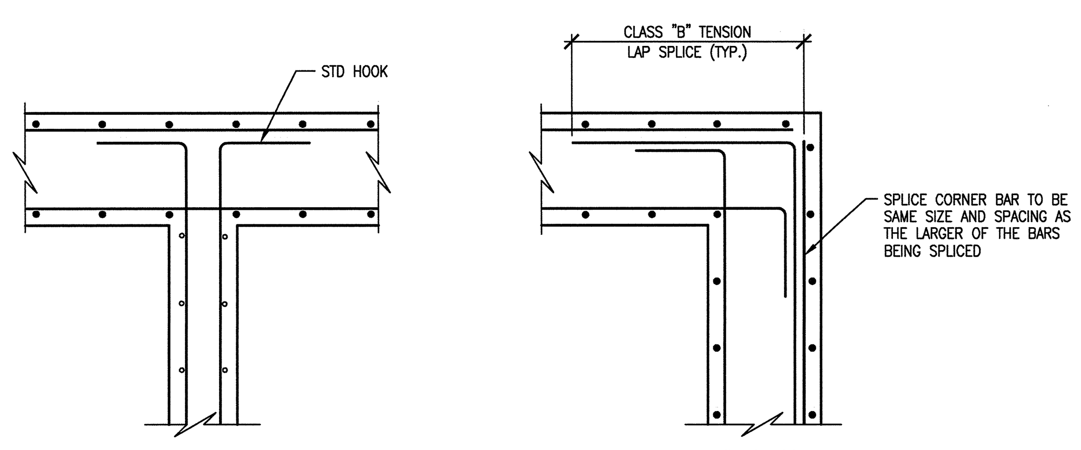

13 PLAN VIEW TYPICAL WALL INTERSECTION DETAILS
S4.20.31 SCALE: NONE SDT03306-5A

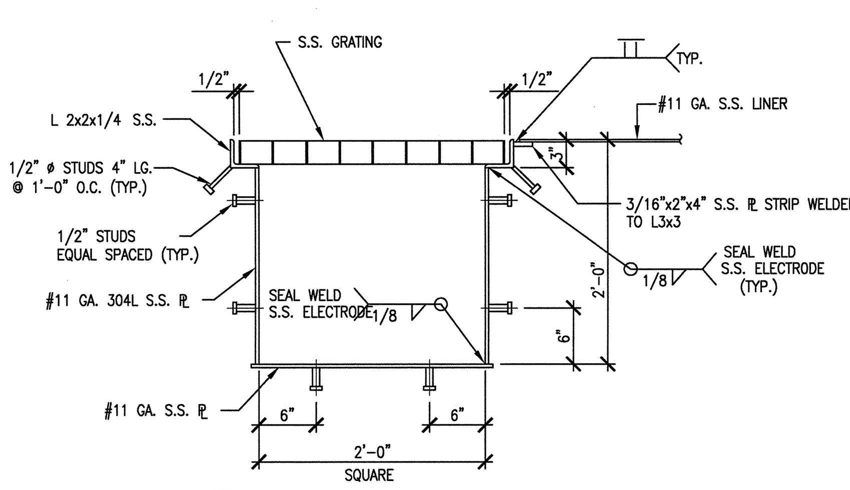

8 TYPICAL DETAIL
S4.20.31 SCALE: 1"=1'-0" SDT03306-5A

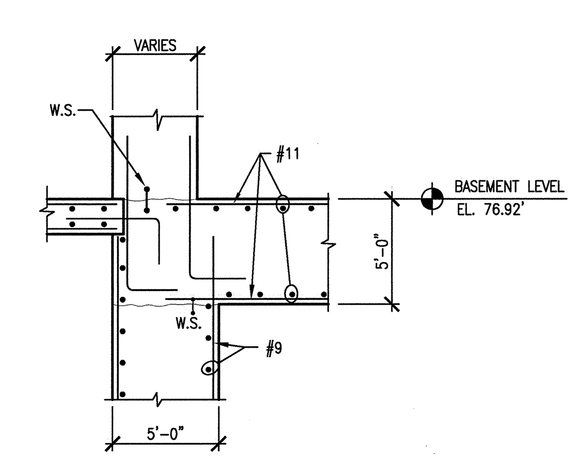

4 SECTION
S2.B1.44 SCALE : 3/16"=1'-0" SDT03307-5A
S2.B1.46

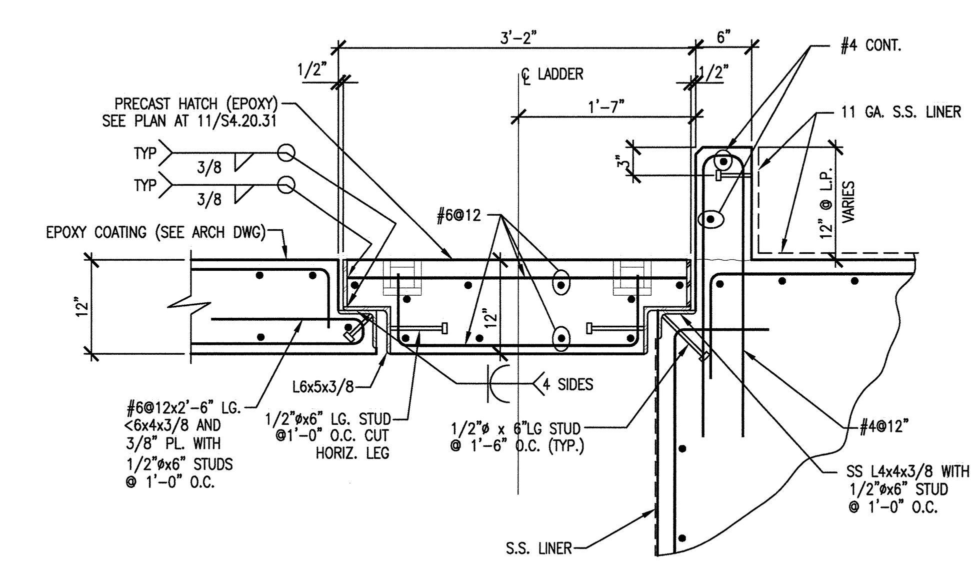

3 SECTION
S2.B1.44 SCALE: 1"=1'-0" SDT03306-5A

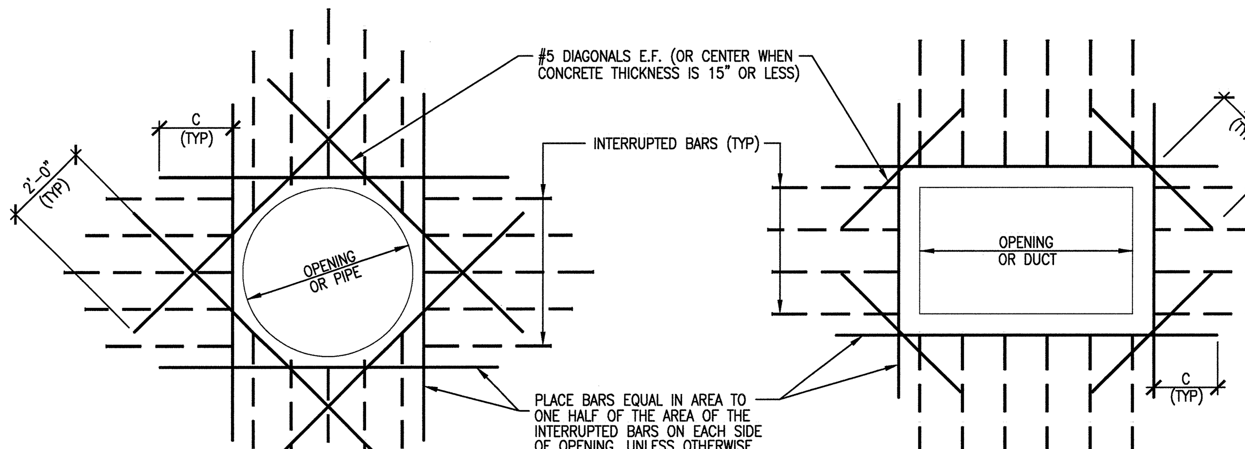

NOTES:

1. TYPICAL FOR ALL OPENINGS 15" AND GREATER IN CONCRETE WALLS AND SLABS UNLESS OTHERWISE NOTED. SPREAD REINF AT SMALLER OPENINGS.
2. BARS ARE NOT REQUIRED AT AN OPENING EDGE PARALLEL TO AND WITHIN 6 INCHES OF A WALL OR BEAM.
3. C = TENSION DEVELOPMENT LENGTH. PROVIDE STANDARD HOOK IF FULL DEVELOPMENT LENGTH IS NOT POSSIBLE.
4. REINFORCING STEEL IS TO BE CARRIED ACROSS ALL CONSTRUCTION JOINTS.

14 CONCRETE OPENING TYPICAL DETAILS
S4.20.31 SCALE: NONE SDT03305-5A

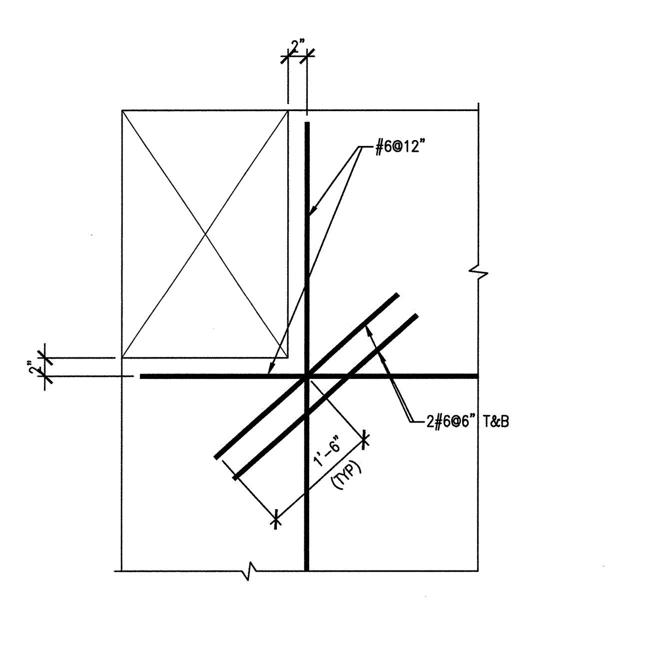

9 TYP. DIAGONAL REINF. AT HATCH OPENING
S4.20.31 SCALE: NONE SDT03306-5A

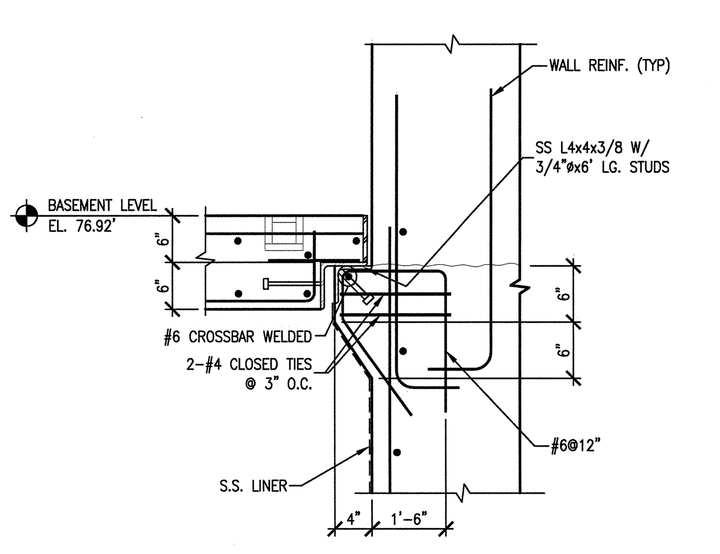

5 SECTION
S2.B1.44 SCALE: 1"=1'-0" SDT03306-5A

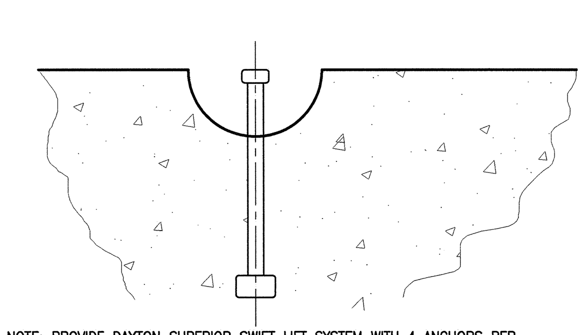

NOTE: PROVIDE DAYTON SUPERIOR SWIFT LIFT SYSTEM WITH 4 ANCHORS PER PANEL. TYPE P-52 SL STAINLESS STEEL ANCHOR, 2 TON RATED LOAD CAPACITY, 6 3/4 INCHES LONG. TYPE P-52 SL STAINLESS STEEL ANCHOR, 4 TON RATED LOAD CAPACITY, 14 INCHES LONG FOR 20 INCH THICK PANEL. PROVIDE 10 UNIVERSAL LIFTING EYES, TYPE P-50 SL.

10 PRECAST LIFT ANCHOR
S4.20.31 SCALE: 1 1/2"=1'-0" SDT03310-5A

A. STAINLESS STEEL LINER NOTES

1. CONTRACTOR SHALL PROVIDE THE ATTACHMENT SYSTEM FOR THE LINER USING STAINLESS STEEL ANGLES AND STAINLESS STEEL TYPE 304L HEADED CONCRETE ANCHORS AS SHOWN. PRIOR TO PLACING CONCRETE, SHOP DRAWINGS SHOWING ALL BRACING AND SUPPORTS, SHALL BE SUBMITTED TO THE CONSTRUCTION MANAGER FOR REVIEW. FOR STAINLESS STEEL LINER, SEE TECHNICAL SPECIFICATION SECTION 05121.
   ALL MATERIAL SHALL BE TYPE 304L STAINLESS STEEL. SUBMIT CERTIFIED MATERIAL TEST REPORTS TO PROVIDE TRACEABILITY OF MATERIAL. ALL WELDING SHALL BE IN ACCORDANCE WITH SPECIFICATION DIVISION 18 – WELDING. INSPECT 100% OF THE WELDS VISUALLY AND WITH DYE PENETRANT METHOD. ALL WELDS ARE TO BE IDENTIFIED BY WELDERS STAMP.
2. STAINLESS STEEL LINER FABRICATOR SHALL REVIEW PIPING, HVAC, ELECTRICAL AND PROCESS DRAWINGS AND SHALL DETAIL THE EMBEDMENT SYSTEM FOR STAINLESS STEEL PANELS TO INTERFACE WITH ALL PENTETRATIONS.
3. INSTALL STAINLESS STEEL LINERS AS FINAL WORK IN LINED AREAS AS MUCH AS POSSIBLE. PROVIDE PROTECTION FOR ALL STAINLESS STEEL. FOR ALTERNATE METHOD OF INSTALLING STAINLESS STEEL LINER PLATES, SEE CONTRACTOR OPTION NOTES BELOW.
4. WELDS BETWEEN SEGMENTS OF BACKING BARS OR BACKING ANGLES FOR THE STAINLESS STEEL LINERS SHALL BE CONTINUIOUS FULL PENETRATION WELDS.
5. THE DETAILED ARRANGEMENT OF ANGLE EMBEDMENTS FOR THE STAINLESS STEEL LINERS SHALL BE BASED ON USING 4 FT X 10 FT STAINLESS STEEL SHEETS.
6. OPENING SIZES, EMBEDMENTS, ANCHOR BOLT LOCATIONS, SIZES, AND EQUIPMENT FOUNDATIONS ARE SHOWN FOR REFERENCE ONLY. CONTRACTOR SHALL ESTABLISH FINAL CONFIGURATION FROM CERTIFIED VENDOR DRAWINGS IN ALL CASES PRIOR TO FABRICATION AND/OR CONSTRUCTION.

B. CONTRACTOR OPTIONAL LINER PLATE NOTES

1. LINER PLATE FRAME ANGLES AND THE LINER PLATE MAY BE SHOP WELDED INTO FRAME ASSEMBLIES AND ATTACHED TO FORMS TO ACT AS A COMPOSITE FORM FOR USE IN PLACEMNET OF CONCRETE.
2. THE SIZE OF THE SHOP WELDED FRAME ASSEMBLIES FOR MERGER WITH FORMWORK SHALL BE DETERMINED BY THE CONTRACTOR.
3. FRAME ASSEMBLIES SHALL BE PLACE IN THEIR FINAL LOCATION AND FIELD WEDED AS NECESSARY TO FORM COMPLETE WALL PANELS PRIOR TO CONCRETE PLACEMENT.
4. FABRICATOR AND CONTRACTOR SHALL USE ANY MECHANICAL METHODS DEEMED NECESSARY TO INSURE THAT FRAME ANGLES AND LINER PLATES REMAIN TRUE AND SQUARE DURING THE WELDING HEAT UP AND COOL DOWN PROCESS.
5. FORMS MAY BE ATTACHED TO THE LINER PLATE ASSEMBLIES AT FRAME ANGLE LOCATIONS BY USING STAINLESS STEEL STUDS. THE SIZE AND SPACING OF THE STAINLESS STEEL STUDS TO BE DETERMINED BY THE FORM CONTRACTOR.
6. ANY HOLES DRILLED IN THE LINER PLATE ASSEMBLIES DURING ATTACHMENT OF FORMS SHALL BE SEAL WELDED AFTER REMOVAL OF FORMS.
7. ANY STAINLESS STEEL STUDS ATTACHED TO LINER PLATE ASSEMBLIES SHALL BE CUT OFF FLUSH WITH LINER PLATE AFTER FORM REMOVAL AND SEAL WELDED TO INSURE WATERTIGHT INTEGRITY.
8. FORM TO LINER PLATE ATTACHMENT SYSTEM SHALL BE DESIGNED SO THAT IN NO CASE SHALL CARBON STEEL ITEMS COME IN CONTACT WITH THE STAINLESS STEEL COMPONENTS COMPRISING THE LINER PLATE FRAME ASSEMBLIES.

NOTES :

1. DOWELS SHALL MATCH WALL AND COLUMN REINFORCEMENT.
2. FOR WALL, COLUMN AND GRADE BEAM INFORMATION SEE SCHEDULE ON S4.30.30

1' 9" 6" 3" 0 1' 2'
SCALE: 1-1/2" = 1'-0"
1' 0 1' 2'
SCALE 1" = 1'-0"
3' 2' 1' 0 3' 6'
SCALE: 3/8" = 1'-0"
4' 2' 0 4' 8' 16'
SCALE: 3/16" = 1'-0"

NO REPRESENTATION OR WARRANTY, EXPRESSED OR IMPLIED, IS MADE AS TO THE ACCURACY, COMPLETENESS OR USEFULNESS OF THE INFORMATION OR STATEMENTS CONTAINED IN THESE DRAWINGS, OR THAT THE USE OR DISCLOSURE OF ANY INFORMATION, APPARATUS, METHOD, OR PROCESS DISCLOSED IN THESE DRAWINGS MAY NOT INFRINGE PRIVATE RIGHTS OF OTHERS. NO LIABILITY IS ASSUMED WITH RESPECT TO THE USE OF, OR FOR DAMAGES RESULTING FROM THE USE OF ANY INFORMATION, APPARATUS, METHOD, OR PROCESS DISCLOSED IN THESE DRAWINGS. DRAWINGS MADE AVAILABLE FOR INFORMATION TO BIDDER ARE NOT TO BE USED FOR OTHER PURPOSES AND ARE TO BE RETURNED UPON REQUEST OF THE FORWARDING CONTRACTOR.

NUMBER OF SECTION OR DETAIL
DRAWING ON WHICH SECTION OR DETAIL IS SHOWN OR TAKEN
SECTION AND DETAIL KEY

THIS DOCUMENT CONTROLLED BY
CHANGE CONTROL SYSTEM 3
ENGINEERING PROCEDURE SNS-ENG-G001

REV	CHANGE TYPE	CHANGE CONTROL SYSTEM	CHANGE REQUEST NUMBER	DESCRIPTION	DSN	CHK	DEPT	DATE	PE	DATE	PJ	DATE	REQ	DATE	UTB	DATE	RPE	RPE NO	DATE	ST	CV	EC	EE	EM	IE	M	PD	SE	AR
2				CERTIFIED FOR CONSTRUCTION – 10/26/01	GPR	REW			CLG	11/15/01	RAD	11/14/01			JRL	11/14/01	JJB	23236	11/13/01	REW		WRS	AK	WRS	BWJ	MP		ED	
1				SUBSTRUCTURES CERTIFIED FOR CONSTRUCTION – 4/18/01	GPR	REW			CLG	4/18	RAD	4/18			JRL	4/19	JJB	23236	4/17/01	SC		WRS	RL	WRS	BWS	MP		WAS	
0				PILES CERTIFIED FOR CONSTRUCTION – 10/13/00	GPR	REW			CLG	–	–	–			JRL	10/24	JJB	23236	10/13/00										

REVISION OR ISSUE PURPOSE — REVISION APPROVALS — SQUAD CHECK

RPE			
	DSN	G. REDDY	10/13/00
	DRW	G.MARSZALEK	10/13/00
	CHK	R.WALKINGTON	10/13/00
	DEPT		
	PE	C.L. GARREN	10/24/00
	PJ	R. DEAN	10/24/00
	REQ		
REV. 2 DATE 11/13/01	UTB	J. LAWSON	10/24/00

DRAWING APPROVALS

JOHN BUSCH REGISTERED ENGINEER AGRICULTURE COMMERCE NO. 23236 STATE OF TENNESSEE

108030700-S8E-8700-A004

Knight/Jacobs Joint Venture
701 Scarboro Road, MS 8253
Oak Ridge, TN 37830
865-241-9433
fax 865-241-3400

KNIGHT
Knight Advanced Technology
549 West Randolph Street
Chicago, IL 60661

UT-BATTELLE
Oak Ridge National Laboratory
managed for the DEPARTMENT OF ENERGY under U.S. GOVERNMENT contract DE-AC05-00OR22725
UT-BATTELLE, LLC, © Oak Ridge, Tennessee

PROJECT NAME:
SPALLATION NEUTRON SOURCE

TARGET BUILDING CONCRETE SECTIONS

1	48	49	50	PLANT	BLDG	FL	SH.	OF	TYPE	CLASS
3	S	X	X	8	8700		1	1	S	U
51		52		53	WBS					REV
NC		NA			1.8.3.7	S4.20.31				2

Date: 11/13/2001 Time: 14:47:01
Username: MARSZALEKGJ
CH-F_VOL2:PROJECTS\7000\700_CADD\TASK_5A\740_PLOT\S4-20-31.DWG

AutoCAD