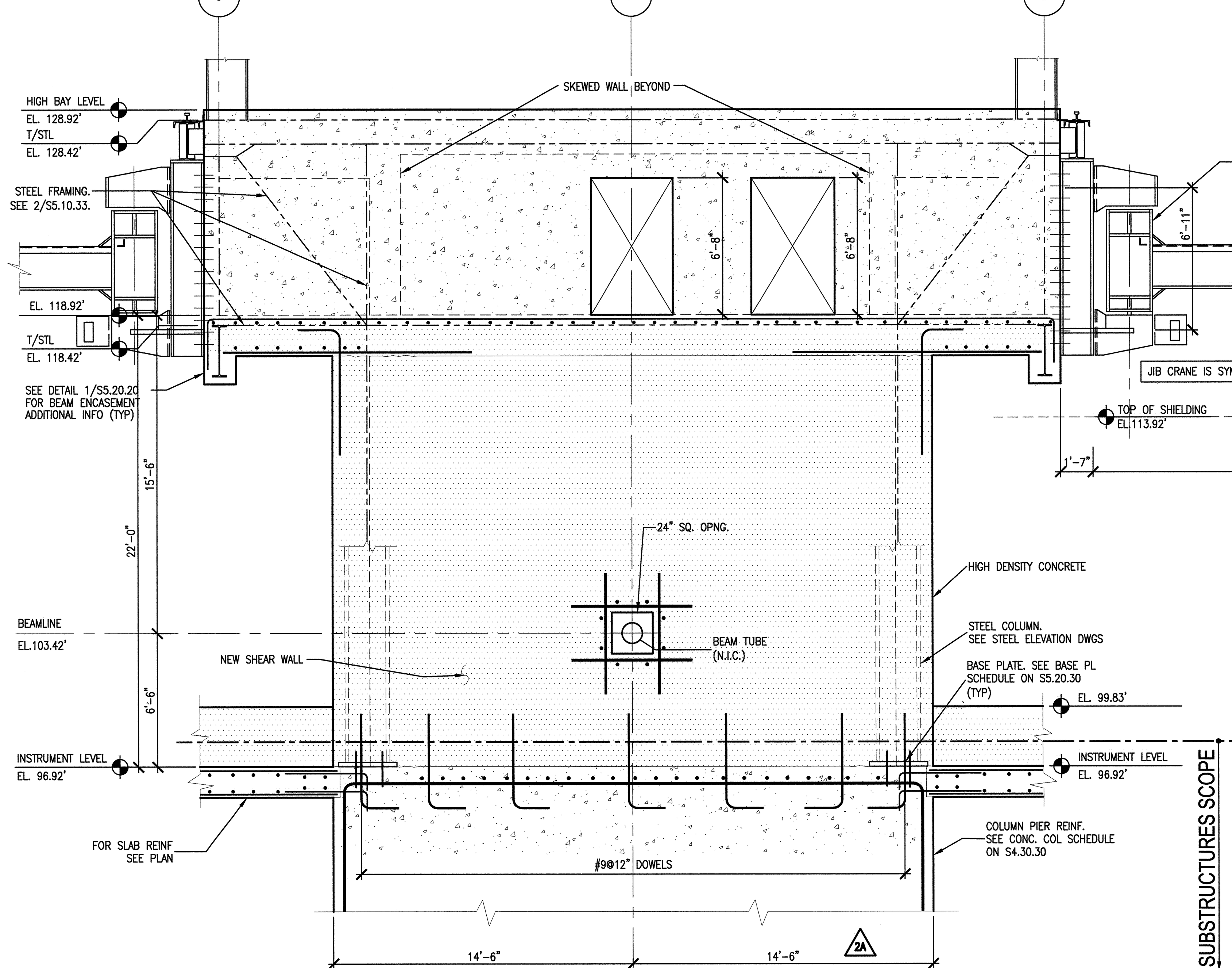

12 (S2.01.42) SECTION
SCALE: 1/4"=1'-0" SSC011-5A
NOTE: FOR ADD'L SECTIONS OF RTBT TUNNEL SEE 1/S4.20.36 & 4/S4.21.38

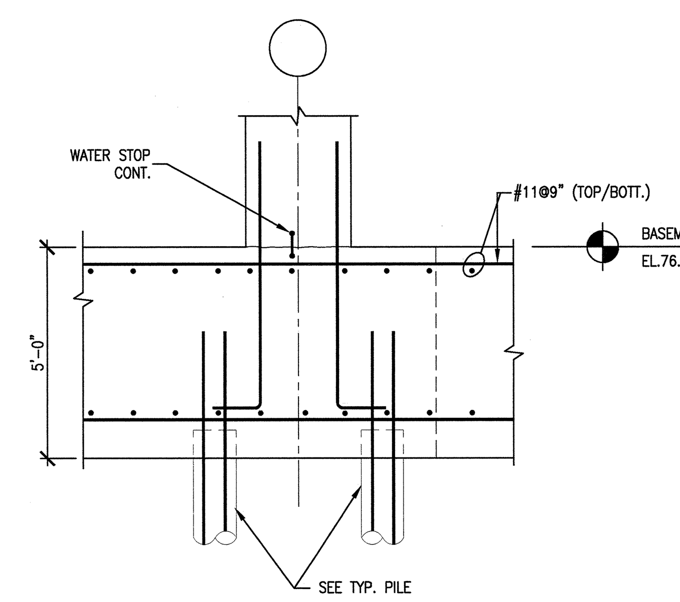

9 (S4.20.30) SECTION
SCALE : 3/8"=1'-0" SDT03305-5A

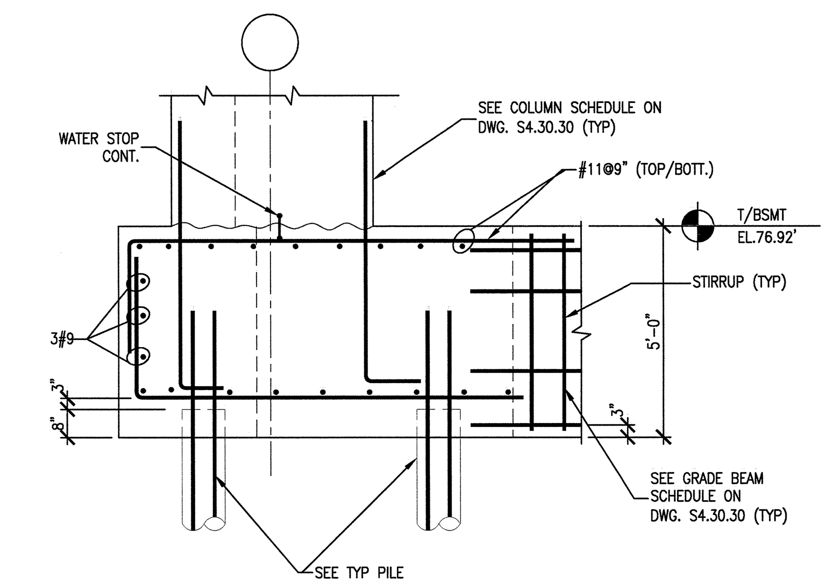

5 (S4.20.30) SECTION
SCALE : 3/8"=1'-0" SDT03305-5A

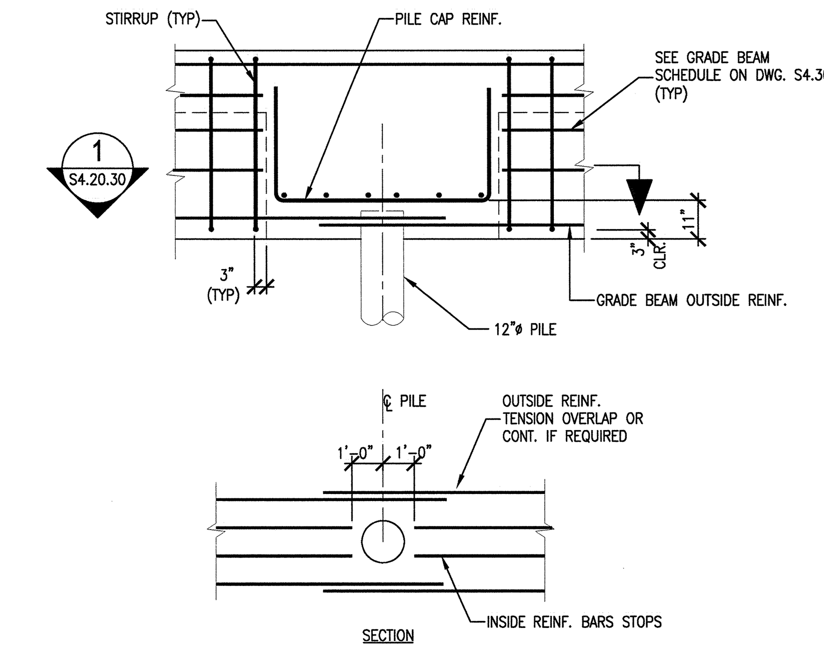

1 (S4.20.30) TYPICAL GRADE BEAM BOTTOM BARS AT 3-PILE CAP
SCALE : NO SCALE SDT03309-5A

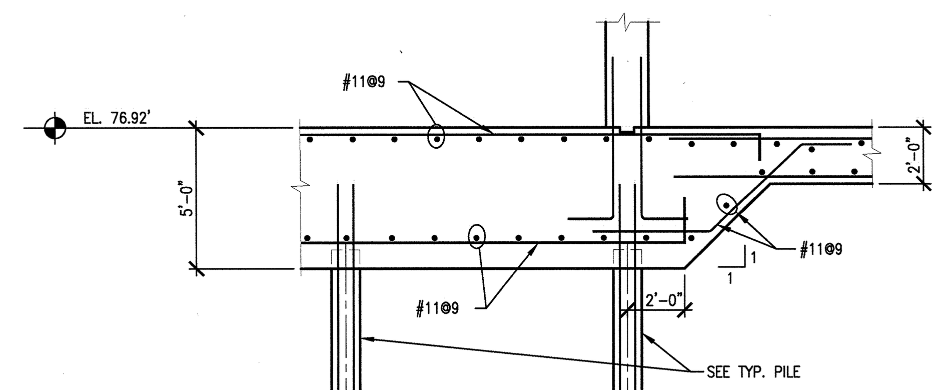

10 (S1.FP.30) SECTION
SCALE : 1/4"=1'-0 SDT03308-5A

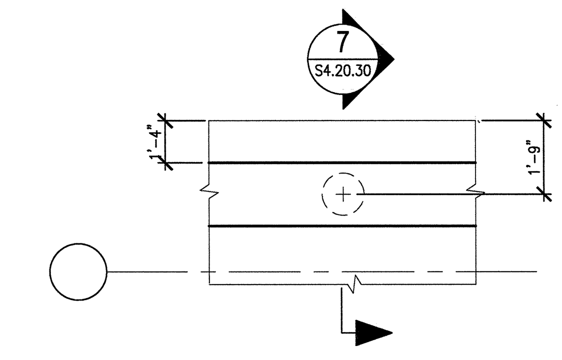

6 (S1.FP.30) TYPICAL OUTSIDE WALL AT MAT - DETAIL PLAN
SCALE : 3/8"=1'-0" SDT03305-5A

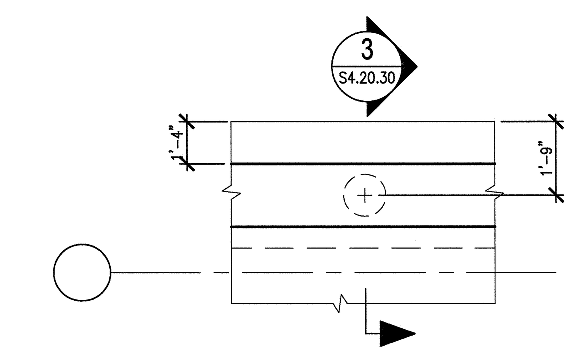

2 (S1.FP.30) TYPICAL OUTSIDE WALL @ GRADE BEAM - DETAIL PLAN
SCALE : 3/8"=1'-0" SDT03305-5A

VOID - SEE SHEET S4-21-32

11 (S2.B1.43) STAIR SECTION
SCALE: 1/4"=1'-0" SDT03308-5A
S1.B1.31
S2.01.43

2B

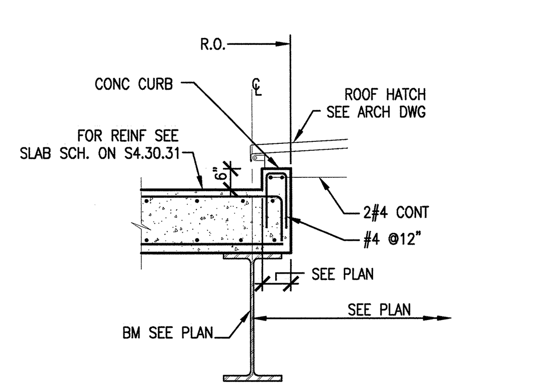

NOTE: PROVIDE DAYTON SUPERIOR SWIFT LIFT SYSTEM WITH 4 ANCHORS PER PANEL. TYPE P-52 SL STAINLESS STEEL ANCHOR, 4 TON RATED LOAD CAPACITY, 14 INCHES LONG. PROVIDE 5 UNIVERSAL LIFTING EYES TYPE P-50 SL.

16 (S2.03.45) SECTION
SCALE: 3/8"=1'-0" SDT033006-5A

2B

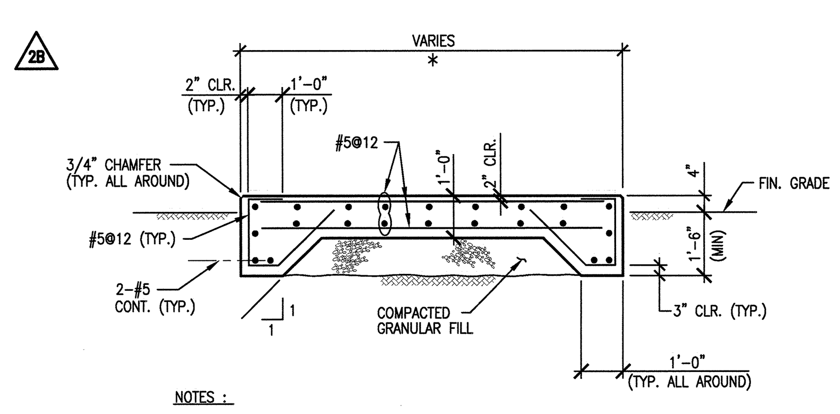

NOTES :
1.) * VERIFY SIZE & LOCATIONS WITH ARCH., ELECT., MECH. OR CERTIFIED MFR'S. DWG'S.
2.) FASTEN EQUIPMENT TO CONCRETE WITH FIELD INSTALLED ANCHOR BOLTS.

13 (S2.01.49) EQUIPMENT PAD - SECTION
SCALE : NONE SDT033006-5A

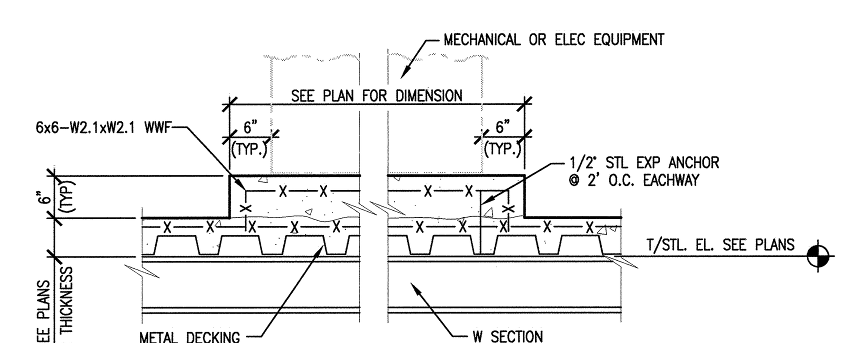

15 (S2.04.41) SECTION THRU HOUSEKEEPING PAD
SCALE: 3/4" = 1'-0" SDT033016-5A
S2.02.41 S2.02.46 S2.04.43
S2.02.42 S2.02.47 S2.04.44
S2.02.43 S2.02.48 S2.04.46
S2.02.44 S2.02.49

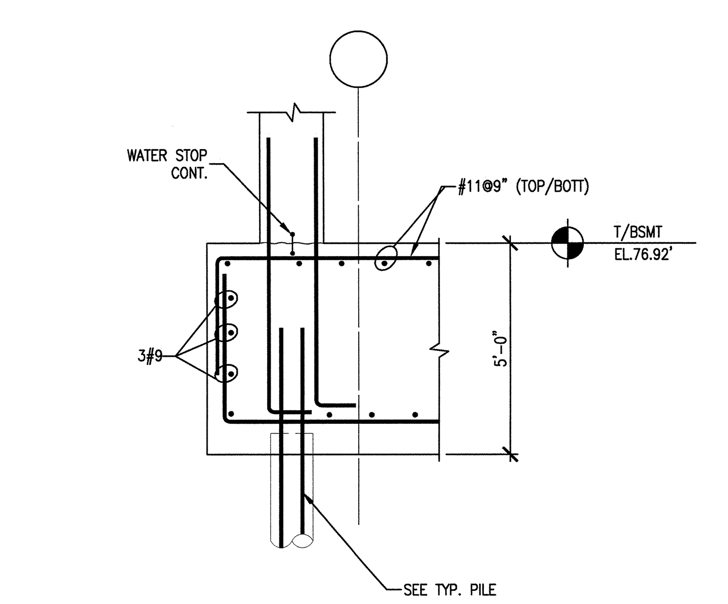

7 (S4.20.30) SECTION
SCALE : 3/8"=1'-0" SDT03305-5A

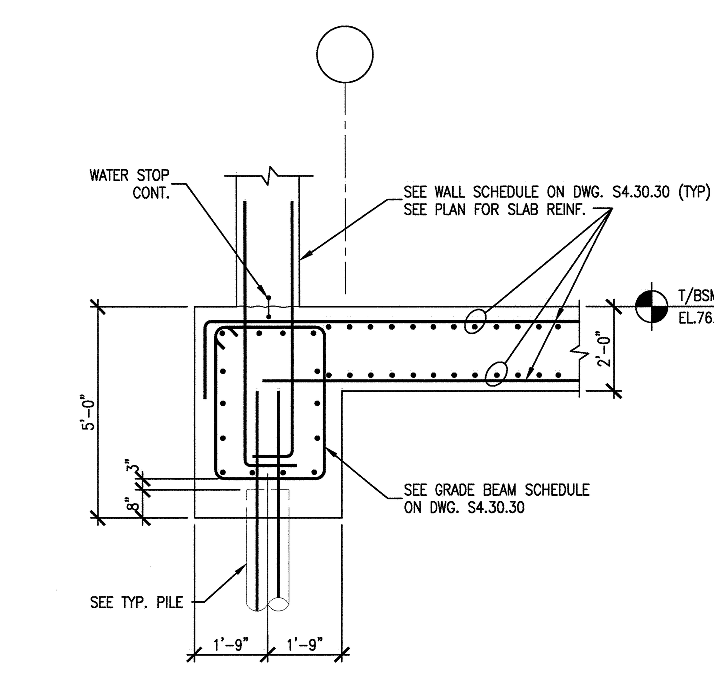

3 (S4.20.30) SECTION
SCALE : 3/8"=1'-0" SDT03305-5A

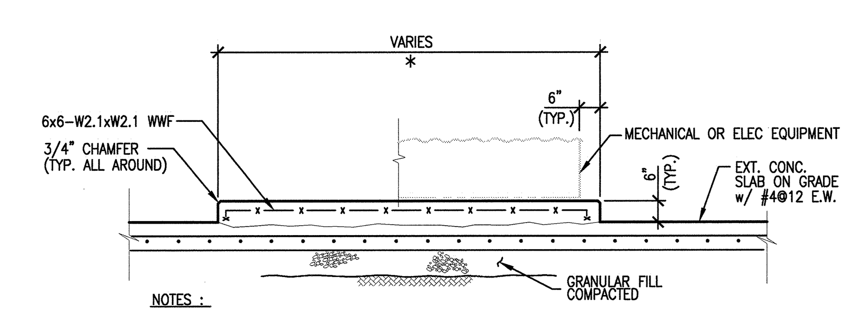

NOTES :
1.) * VERIFY SIZE & LOCATIONS WITH ARCH., ELECT., MECH. OR CERTIFIED MFR'S. DWG'S.
2.) FASTEN EQUIPMENT TO CONCRETE WITH FIELD INSTALLED ANCHOR BOLTS.

13A (S2.02.41) EQUIPMENT PAD - SECTION
SCALE : NONE SDT033006-5A
S2.02.43
S2.02.51

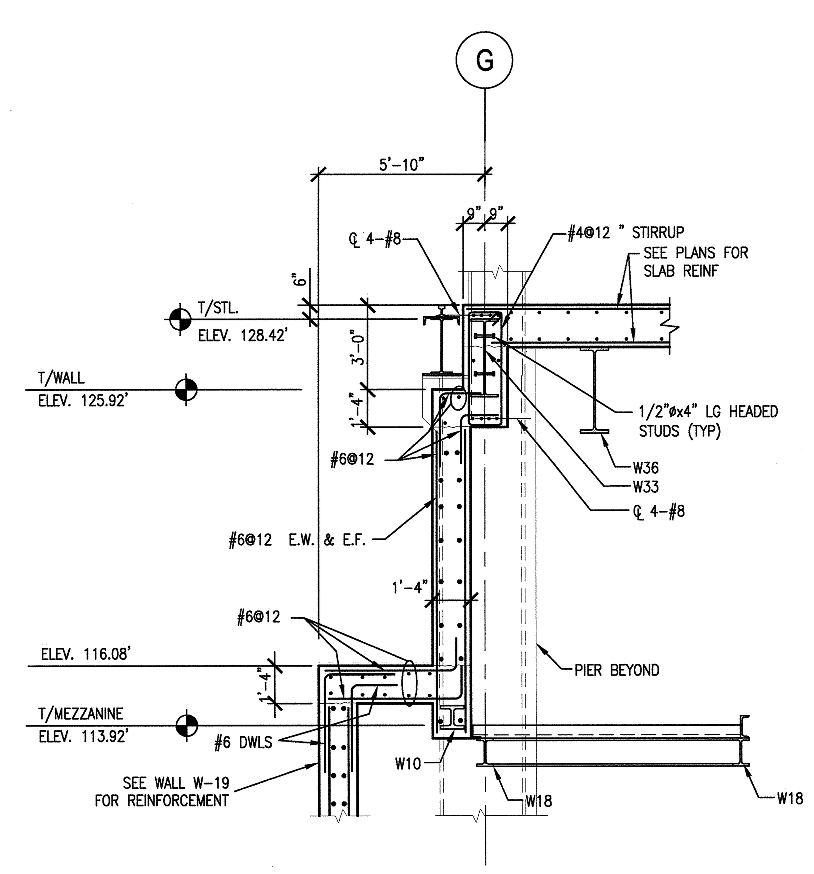

17 (S2.03.45) SECTION
SCALE: 1/4"=1'-0" SSC011-5A
S2.02.45

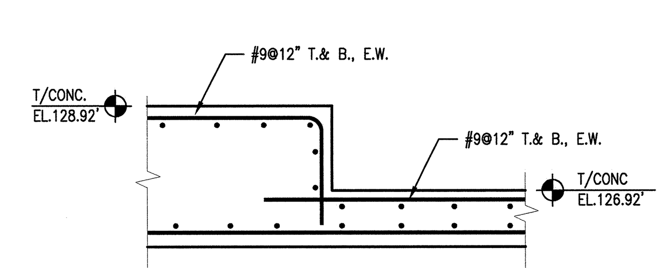

14 (S2.03.42) SECTION
SCALE : NONE SDT033006-5A

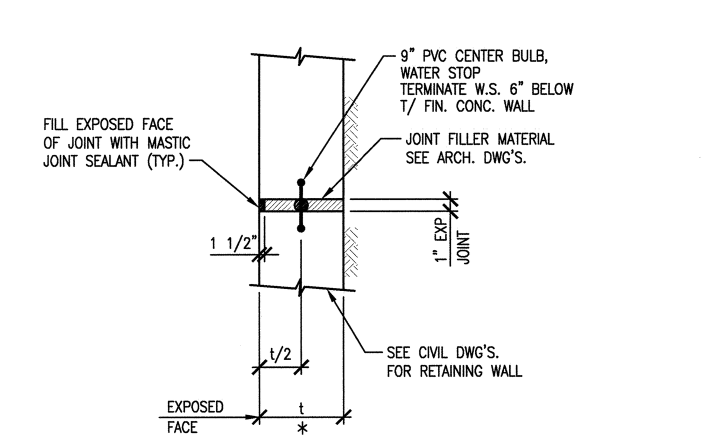

18 (S2.01.51) TYPICAL DETAIL
SCALE : 3/4"=1'-0" SDT033006-5A

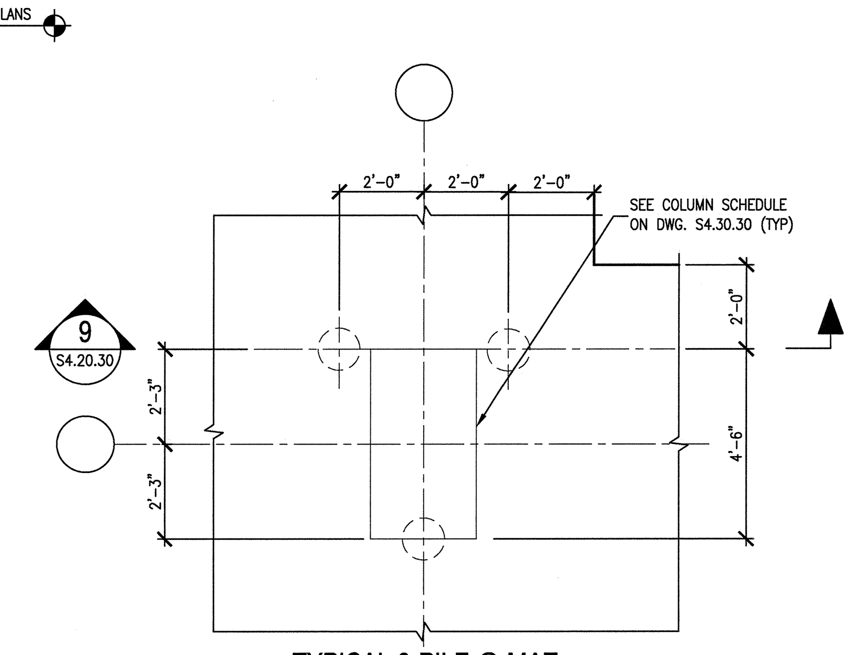

8 (S1.FP.30) TYPICAL 3-PILE @ MAT DETAIL PLAN
SCALE : 3/8"=1'-0" SDT03305-5A

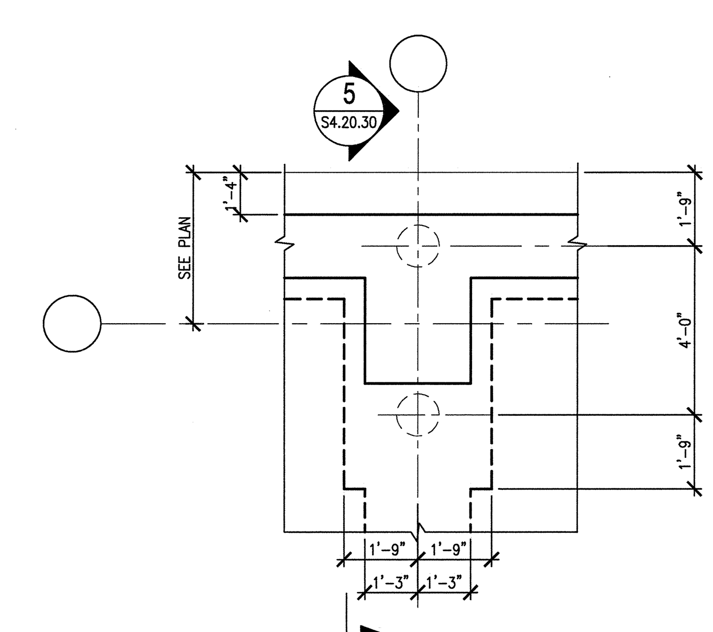

4 (S1.FP.30) DETAIL PLAN
SCALE : 3/8"=1'-0" SDT03305-5A

3' 2' 1' 0 3' 6'
SCALE: 3/8" = 1'-0"

4' 2' 0 4' 8'
SCALE: 1/4" = 1'-0"

NOTES :
1. DOWELS SHALL MATCH WALL & COLUMN REINFORCEMENT.
2. FOR WALL, COLUMN & GRADE BEAM INFO, SEE SCHEDULE ON S4.30.30

NO REPRESENTATION OR WARRANTY, EXPRESSED OR IMPLIED, IS MADE AS TO THE ACCURACY, COMPLETENESS OR USEFULNESS OF THE INFORMATION OR STATEMENTS CONTAINED IN THESE DRAWINGS, OR THAT THE USE OR DISCLOSURE OF ANY INFORMATION, APPARATUS, METHOD, OR PROCESS DISCLOSED IN THESE DRAWINGS MAY NOT INFRINGE PRIVATE RIGHTS OF OTHERS. NO LIABILITY IS ASSUMED WITH RESPECT TO THE USE OF, OR FOR DAMAGES RESULTING FROM THE USE OF ANY INFORMATION, APPARATUS, METHOD, OR PROCESS DISCLOSED IN THESE DRAWINGS. DRAWINGS MADE AVAILABLE FOR INFORMATION TO BIDDER ARE NOT TO BE USED FOR OTHER PURPOSES AND ARE TO BE RETURNED UPON REQUEST OF THE FORWARDING CONTRACTOR.

SECTION AND DETAIL KEY
NUMBER OF SECTION OR DETAIL
DRAWING ON WHICH SECTION OR DETAIL IS SHOWN OR TAKEN

THIS DOCUMENT CONTROLLED BY
CHANGE CONTROL SYSTEM 3
ENGINEERING PROCEDURE SNS-ENG-G001

REV	CHANGE TYPE	CHANGE CONTROL SYSTEM	CHANGE REQUEST NUMBER	DESCRIPTION	DSN	CHK	DEPT	DATE	PE	DATE	PJ	DATE	REQ	DATE	UTB	DATE	RPE	RPE NO	DATE	ST	CV	EC	EE	EM	IE	M	PD	SE	AR
3				CERTIFIED FOR CONSTRUCTION – 10/26/01	GPR	REW			(signature)	11/15/01	RAD	11/14/01			(signature)	11/14/01	JJB	23236	11/13/01	REW		WRS	AK	WRS	BWJ		MP		ED
2	A	3	1–13	DCN T–001 THRU T–013 – 9/21/01	GPR	REW			CLG	10/03	RAD	10/02			JRL	10/02	JJB	23236	9/21/01	REW	–	WRS	RL	WRS	BWJ	–	MP	–	WAS
1				SUBSTRUCTURES CERTIFIED FOR CONSTRUCTION – 4/18/01	GPR	REW			CLG	4/18	RAD	4/18			JRL	4/19	JJB	23236	4/17/01	SC		WRS	RL	WRS	BWJ		MP		WAS
0				PILES CERTIFIED FOR CONSTRUCTION – 10/13/00	GPR	REW			CLG	–	–	–			JRL	10/24	JJB	23236	10/13/00										

REVISION OR ISSUE PURPOSE / REVISION APPROVALS / SQUAD CHECK

RPE: JOHN BUSCH, REGISTERED ENGINEER, AGRICULTURE COMMERCE, NO. 23236, STATE OF TENNESSEE
REV. 3 DATE 11/13/01

DRAWING APPROVALS		
DSN	G. REDDY	10/13/00
DRW	G.MARSZALEK	10/13/00
CHK	R.WALKINGTON	10/13/00
DEPT		
PE	C.L. GARREN	10/24/00
PJ	R. DEAN	10/24/00
REQ		
UTB	J. LAWSON	10/24/00

108030700-S8E-8700-A003

Knight/Jacobs Joint Venture
701 Scarboro Road, MS 8253
Oak Ridge, TN 37830
865-241-9433
fax 865-241-3400

KNIGHT
Knight Advanced Technology
549 West Randolph Street
Chicago, IL 60661

UT-BATTELLE
Oak Ridge National Laboratory
managed for the DEPARTMENT OF ENERGY under U.S. GOVERNMENT contract DE-AC05-00OR22725
UT-BATTELLE, LLC, © Oak Ridge, Tennessee

PROJECT NAME:
SPALLATION NEUTRON SOURCE

TARGET BUILDING
CONCRETE SECTIONS

1	48	49	50	PLANT	BLDG	FL	SH.	OF	TYPE	CLASS
3	S	X	X	8	8700		1	1	S	U
51		52		53	WBS					REV
NC		NA			1.8.3.7		S4.20.30			3