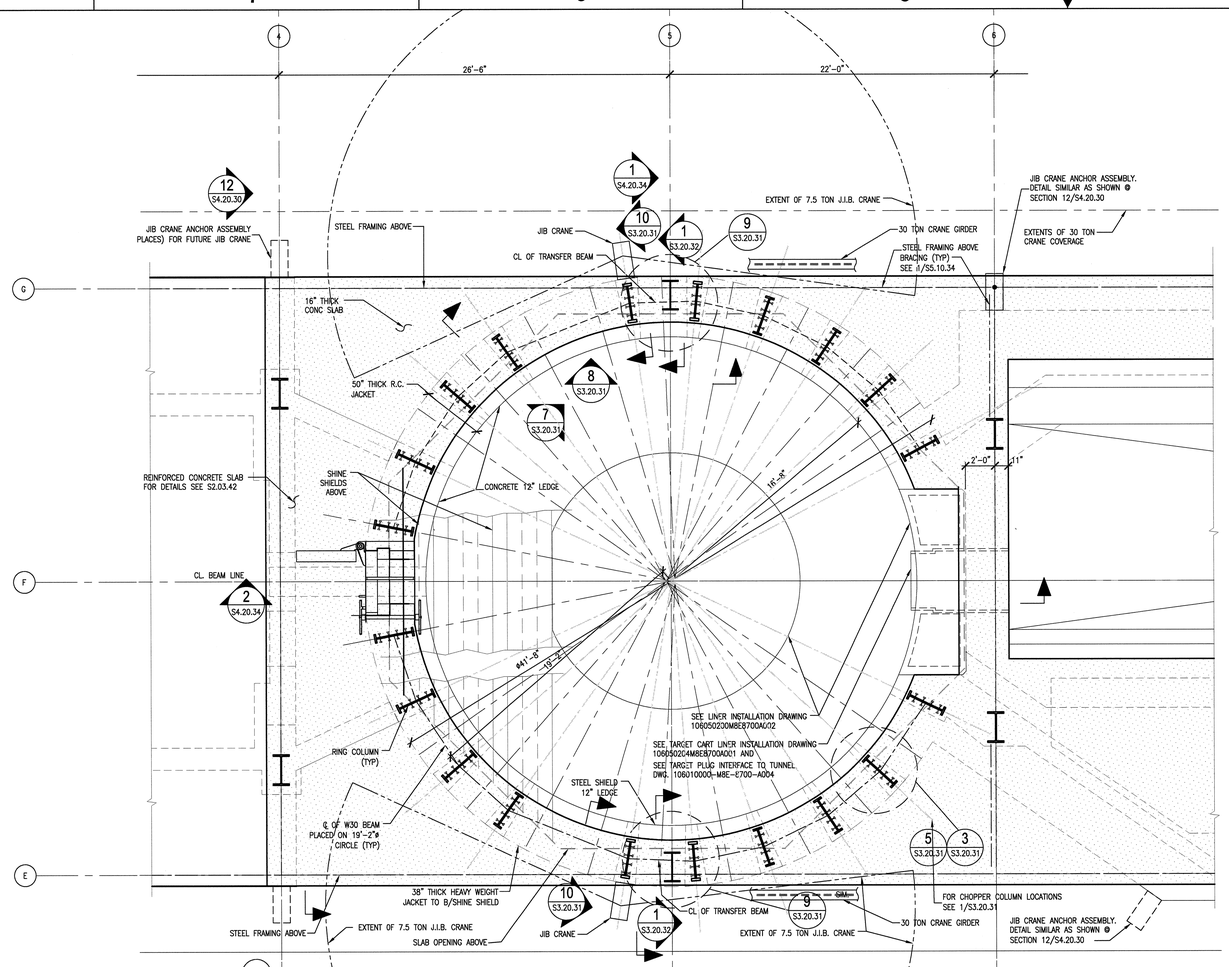

2 S2.01.42 DETAIL PLAN AT EL.126.92' LOOKING DOWN
SCALE: 1/4"=1'-0" SFP01T-5A
NOTE: FOR ADDITIONAL INFO SEE S2.03.42.

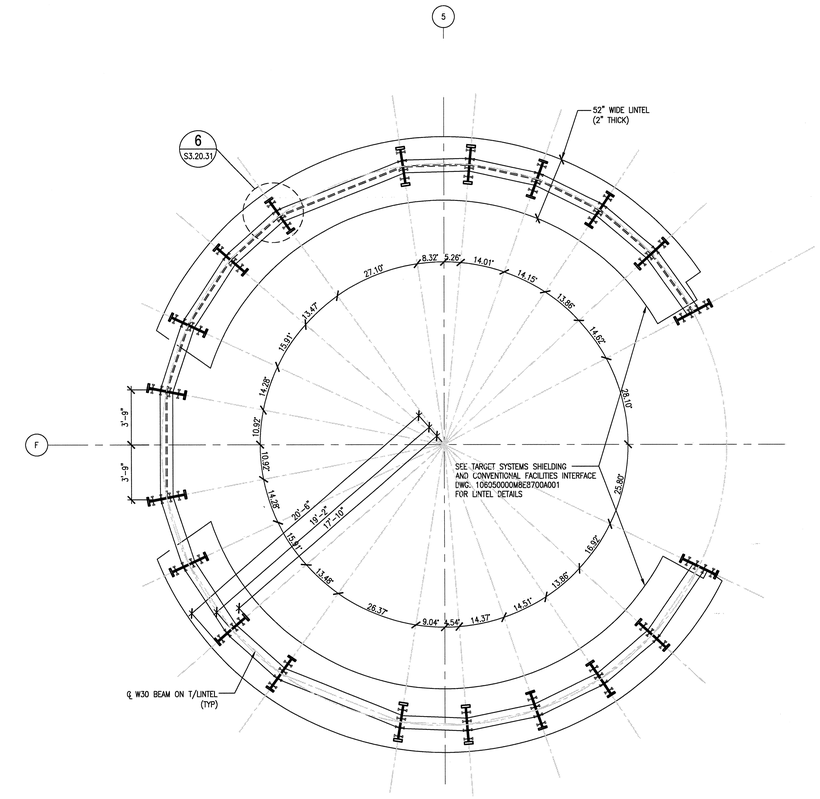

1 S3.20.31 DETAIL PLAN AT RING BEAM
SCALE: 1/4"=1'-0" SFP01T-5A

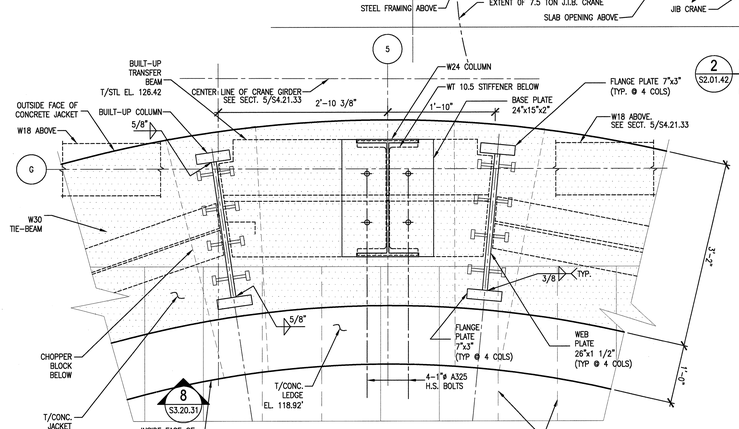

9 S3.20.31 DETAIL PLAN
SCALE: 1"=1'-0" SSDT05102-5A

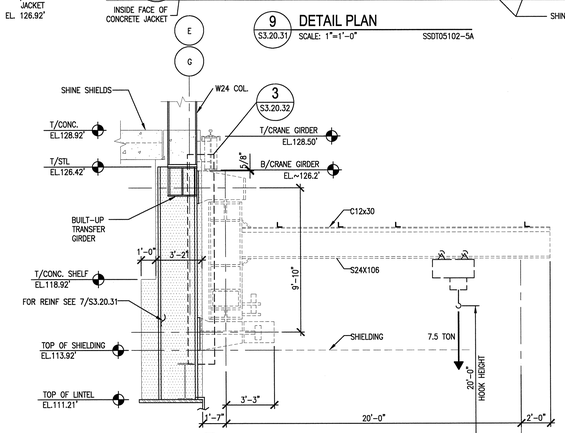

10 S3.20.31 SECTION
SCALE: 1/4"=1'-0" SSC005-5A

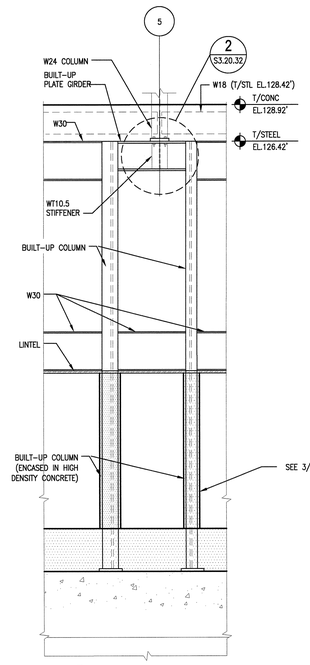

8 S3.20.31 ELEVATION
SCALE: 1/4"=1'-0" SSC005-5A

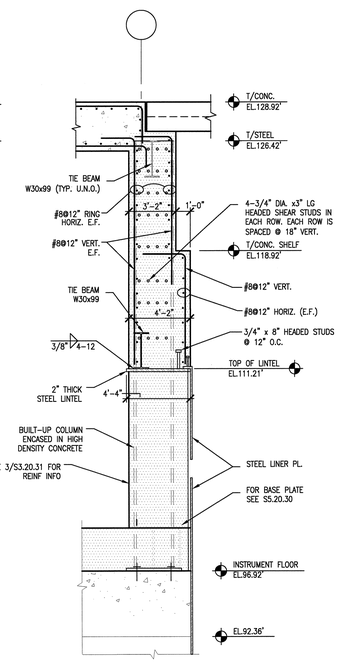

7 S3.20.31 SECTION
SCALE: 1/4"=1'-0" SSC005-5A

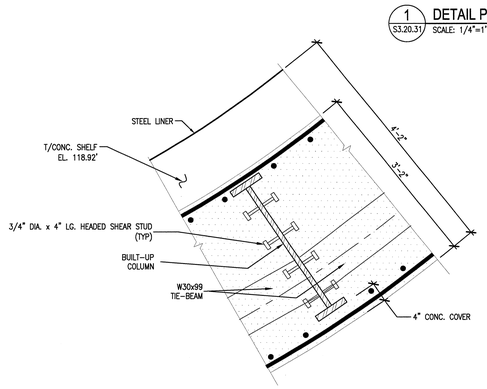

5 S3.20.31 PARTIAL PLAN
SCALE: 1"=1'-0" SSDT05102-5A

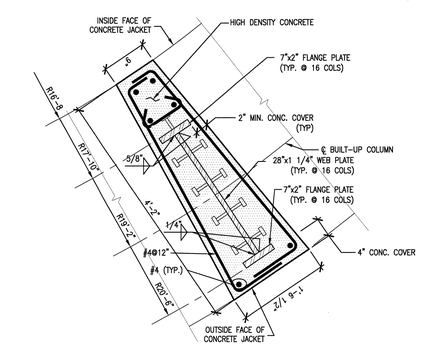

3 S2.01.42 PARTIAL PLAN AT TYP. CHOPPER
SCALE: 1"=1'-0" SDT05102-5A

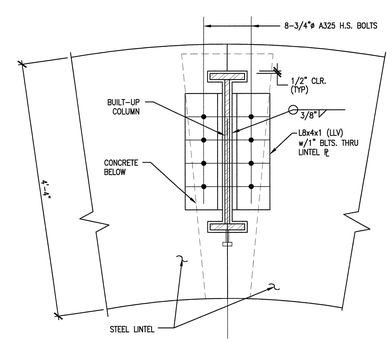

6 S3.20.31 TYPICAL LINTEL CUTOUT AROUND COLUMNS
SCALE: NO SCALE SSDT05102-5A

LEGEND

- HEAVY WEIGHT CONCRETE (250 PCF)
- UNLESS NOTED OTHERWISE ALL CONCRETE IS REGULAR WEIGHT (150 PCF)

NOTE:
1. SEE SECTION 10/S3.20.31 & 12/S4.20.30 FOR JIB CRANE MOUNTING DETAILS (TYP).

SCALE: 1/4" = 1'-0" SCALE 1" = 1'-0"

108030700-S8E-8700-A077

Knight/Jacobs Joint Venture
701 Scarboro Road, MS 8253
Oak Ridge, TN 37830
865-241-9433
fax 865-241-3400

KNIGHT
Knight Advanced Technology
540 West Randolph Street
Chicago, IL 60661

UT-BATTELLE
Oak Ridge National Laboratory
managed for the DEPARTMENT OF ENERGY under U.S. GOVERNMENT contract DE-AC05-00OR22725
UT-BATTELLE, LLC. + Oak Ridge, Tennessee

DSN	G. REDDY	10/26/01
DRW	G.MARSZALEK	10/26/01
CHK	R.WALKINGTON	10/26/01
DEPT		
PE		11/5/01
PJ		11/14/01
REQ		
REV. 0	DATE 11/14/01	UTB

RPE: JOHN BUSCH, REGISTERED ENGINEER, STATE OF TENNESSEE

PROJECT NAME:
SPALLATION NEUTRON SOURCE
TARGET BUILDING
TARGET VESSEL AND RTBT TUNNEL
CHOPPER BLOCK-STEEL COLUMN DETAILS

1	48	49	50	PLANT	BLDG	FL	SH.	OF	TYPE	CLASS
3	S	X	X	8	8700		1	1	P	U
51		52		53	WBS					REV
NC		NA			1.8.3.7		S3.20.31			0

REV	CHANGE TYPE	CHANGE CONTROL SYSTEM	CHANGE REQUEST NUMBER	DESCRIPTION	DSN	CHK	DEPT
0				CERTIFIED FOR CONSTRUCTION – 10/26/01	GPR	REW	

REVISION OR ISSUE PURPOSE

DATE	PE	DATE	PJ	DATE	REQ	DATE	UTB	DATE	RPE	RPE NO	DATE
	11/5/01		11/14/01				11/14/01	JJB	23236		11/13/01

REVISION APPROVALS

ST	CV	EC	EE	EM	IE	M	PD	SE	AR
REW	–	WRS	AK	WRS	BWJ	–	MP	–	ED

SQUAD CHECK

DRAWING APPROVALS

NO REPRESENTATION OR WARRANTY, EXPRESSED OR IMPLIED, IS MADE AS TO THE ACCURACY, COMPLETENESS OR USEFULNESS OF THE INFORMATION OR STATEMENTS CONTAINED IN THESE DRAWINGS, OR THAT THE USE OR DISCLOSURE OF ANY INFORMATION, APPARATUS, METHOD, OR PROCESS DISCLOSED IN THESE DRAWINGS MAY NOT INFRINGE PRIVATE RIGHTS OF OTHERS. NO LIABILITY IS ASSUMED WITH RESPECT TO THE USE OF, OR FOR DAMAGES RESULTING FROM THE USE OF ANY INFORMATION, APPARATUS, METHOD, OR PROCESS DISCLOSED IN THESE DRAWINGS. DRAWINGS MADE AVAILABLE FOR INFORMATION TO BIDDER ARE NOT TO BE USED FOR OTHER PURPOSES AND ARE TO BE RETURNED UPON REQUEST OF THE FORWARDING CONTRACTOR.

NUMBER OF SECTION OR DETAIL
DRAWING ON WHICH SECTION OR DETAIL IS SHOWN OR TAKEN
SECTION AND DETAIL KEY

THIS DOCUMENT CONTROLLED BY
CHANGE CONTROL SYSTEM 3
ENGINEERING PROCEDURE SNS-ENG-G001

Date: 11/13/2001 Time: 14:49:12
Username: BARSZALEKGC
DN=C,O=US,OU=DOE,OU=ORO,OU=UT-BATTELLE,LLC,OU=NAT,OU=TJSO-35-31,CN=G