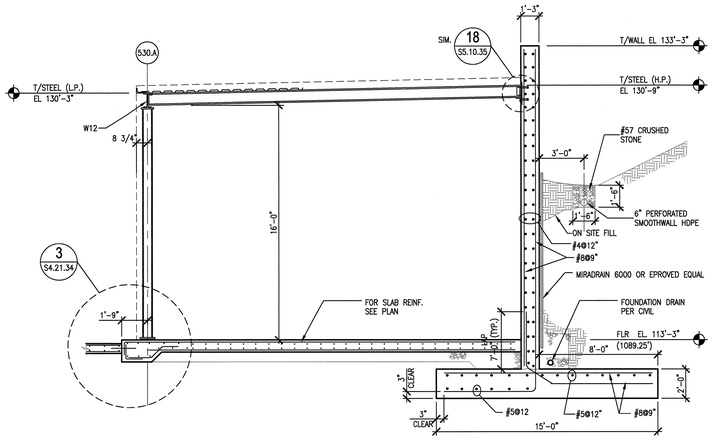

3 S2.02.51 COMPRESSOR BUILDING SECTION
SCALE: 1/4"=1'-0" SSC031-5A

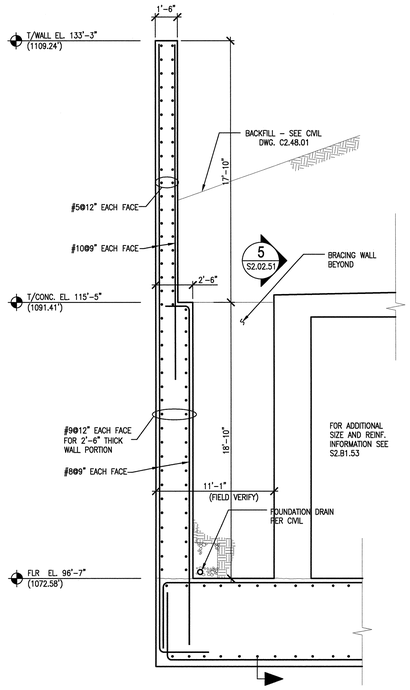

4 S2.02.51 RETAINING WALL SECTION @ RING DUMP
SCALE: 1/4"=1'-0" SSC031-5A

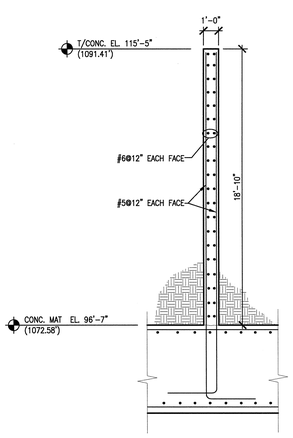

5 S2.02.51 BRACE FOR RETAINING WALL @ RING DUMP
SCALE: 1/4"=1'-0" SSC031-5A

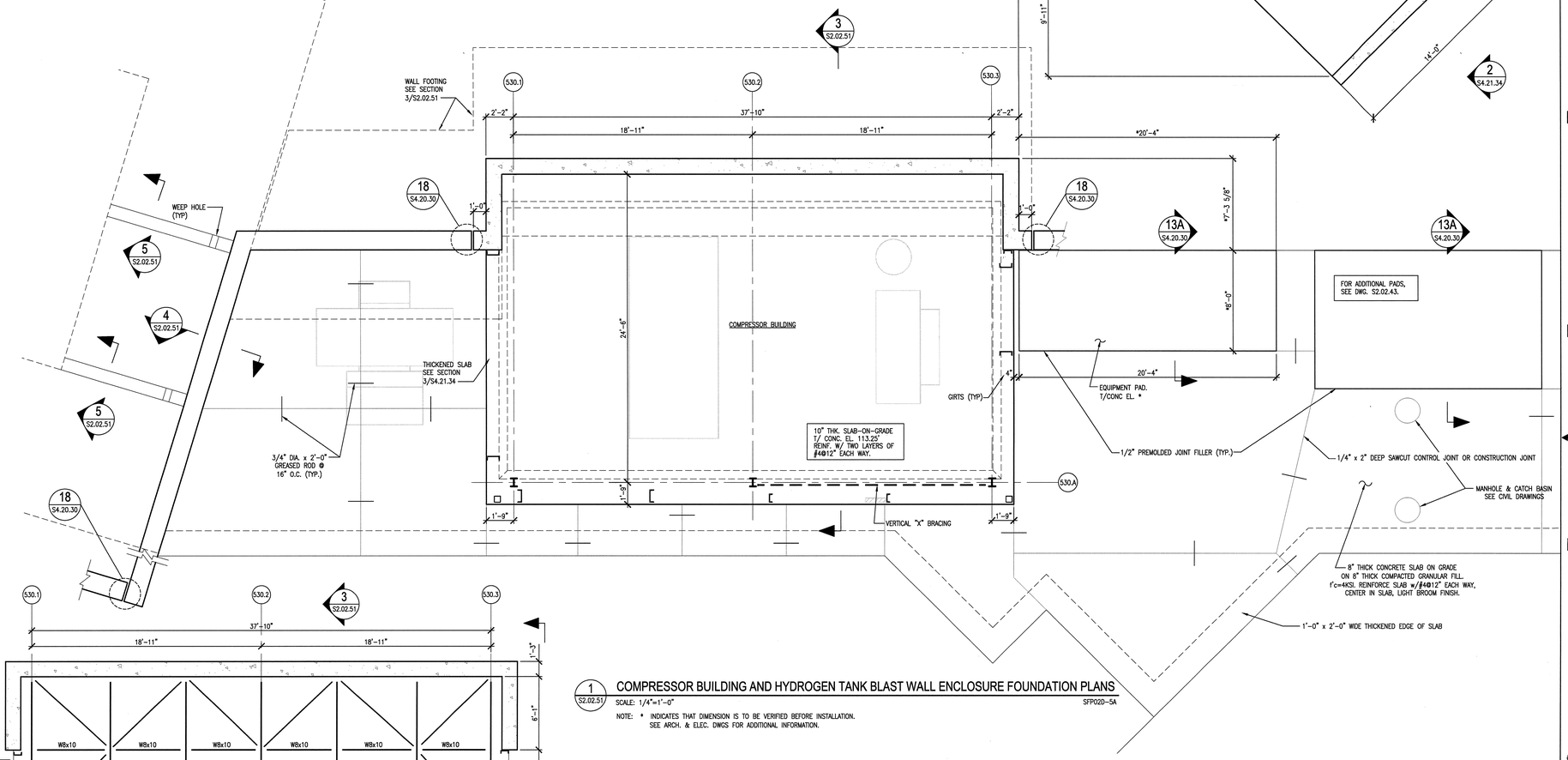

1 S2.02.51 COMPRESSOR BUILDING AND HYDROGEN TANK BLAST WALL ENCLOSURE FOUNDATION PLANS
SCALE: 1/4"=1'-0" SFP020-5A

NOTE: * INDICATES THAT DIMENSION IS TO BE VERIFIED BEFORE INSTALLATION. SEE ARCH. & ELEC. DWGS FOR ADDITIONAL INFORMATION.

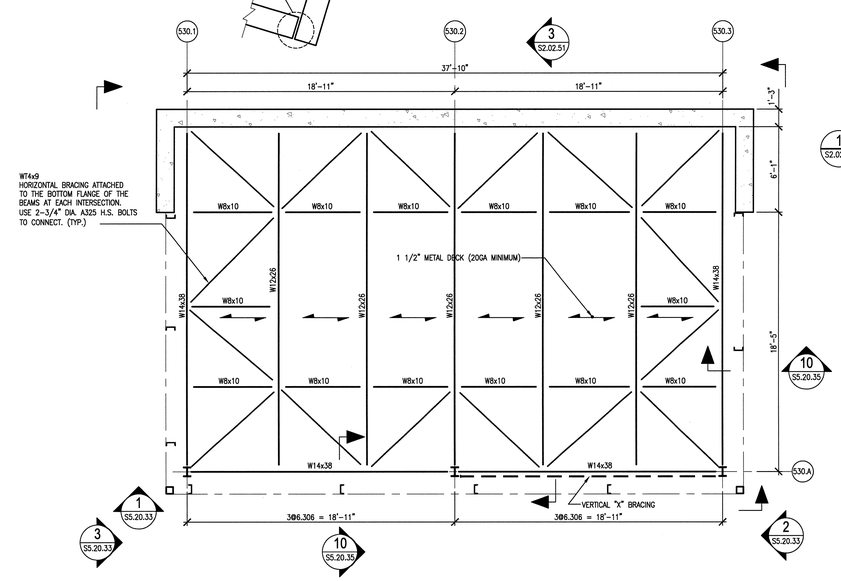

2 S2.02.51 COMPRESSOR BUILDING ROOF FRAMING PLAN
SCALE: 1/4"=1'-0" SRF090-5A

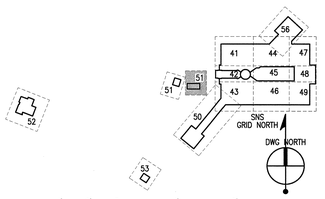

SCALE: 1/4" = 1'-0"

108031500-S8E-8760-A001

Knight Jacobs
Knight/Jacobs Joint Venture
701 Scarboro Road, MS 8253
Oak Ridge, TN 37830
865-241-9433
fax 865-241-3400

KNIGHT
Knight Advanced Technology
549 West Randolph Street
Chicago, IL 60661

UT-BATTELLE
Oak Ridge National Laboratory
managed for the DEPARTMENT OF ENERGY under U.S. GOVERNMENT contract DE-AC05-00OR22725
UT-BATTELLE, LLC. + Oak Ridge, Tennessee

PROJECT NAME:
SPALLATION NEUTRON SOURCE

COMPRESSOR BUILDING
FLOOR AND ROOF PLANS
LEVEL 2, SECTOR 51

1	48	49	50	PLANT	BLDG	FL	SH.	OF	TYPE	CLASS
3	S	X	X	8	8760		1	1	P	U
51		52		53	WBS					REV
NC		NA			1.8.3.15		S2.02.51			0

DSN	G. REDDY	10/26/01
DRW	G.MARSZALEK	10/26/01
CHK	R.WALKINGTON	10/26/01
DEPT		
PE		11/13/01
PJ	R.O'Brien	11/14/01
REQ		
UTB		11/16/01

RPE: JOHN BUSCH, REGISTERED ENGINEER, AGRICULTURE, COMMERCE, No. 23236, STATE OF TENNESSEE

REV. 0 DATE 11/13/01 — DRAWING APPROVALS

REV	CHANGE TYPE	CHANGE REQUEST SYSTEM	CHANGE REQUEST NUMBER	DESCRIPTION (REVISION OR ISSUE PURPOSE)	DSN	CHK	DEPT	DATE	PE	DATE	PJ	DATE	REQ	DATE	UTB	DATE	RPE	RPE NO	DATE	ST	CV	EC	EE	EM	IE	M	PD	SE	AR
0				CERTIFIED FOR CONSTRUCTION – 10/26/01	GPR	REW			RWD	11/13/01	RAO	11/14/01			DPK	11/16/01	JJB	23236	11/13/01	REW	–	WRS	AK	WRS	EWJ	–	MP	–	ED

SQUAD CHECK

NO REPRESENTATION OR WARRANTY, EXPRESSED OR IMPLIED, IS MADE AS TO THE ACCURACY, COMPLETENESS OR USEFULNESS OF THE INFORMATION OR STATEMENTS CONTAINED IN THESE DRAWINGS, OR THAT THE USE OR DISCLOSURE OF ANY INFORMATION, APPARATUS, METHOD, OR PROCESS DISCLOSED IN THESE DRAWINGS MAY NOT INFRINGE PRIVATE RIGHTS OF OTHERS. NO LIABILITY IS ASSUMED WITH RESPECT TO THE USE OF, OR FOR DAMAGES RESULTING FROM THE USE OF ANY INFORMATION, APPARATUS, METHOD, OR PROCESS DISCLOSED IN THESE DRAWINGS. DRAWINGS MADE AVAILABLE FOR INFORMATION TO BIDDER ARE NOT TO BE USED FOR OTHER PURPOSES AND ARE TO BE RETURNED UPON REQUEST OF THE FORWARDING CONTRACTOR.

NUMBER OF SECTION OR DETAIL
DRAWING ON WHICH SECTION OR DETAIL IS SHOWN OR TAKEN
SECTION AND DETAIL KEY

THIS DOCUMENT CONTROLLED BY
CHANGE CONTROL SYSTEM 3
ENGINEERING PROCEDURE SNS-ENG-0001

Date: 11/13/2001 Time: 15:28:13
Username: MARSZALEKGJ
CR-P:\JOB\JPROJECTS\0001\700_CADD\DWG\AK_SA\740_FL\S2\S2-02-51.DWG

AutoCAD