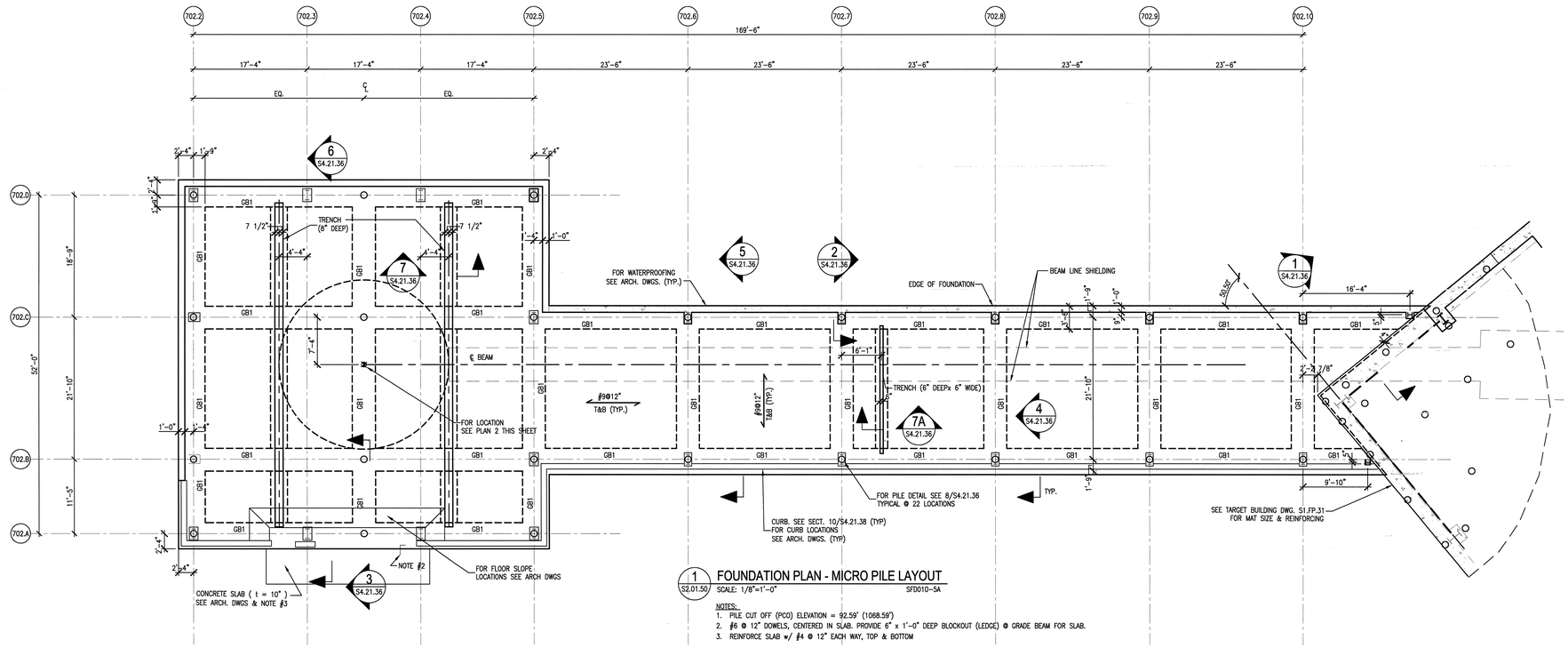

1 S2.01.50 FOUNDATION PLAN - MICRO PILE LAYOUT

SCALE: 1/8"=1'-0"

SFD010-5A

NOTES:

1. PILE CUT OFF (PCO) ELEVATION = 92.59' (1068.59')
2. #6 @ 12" DOWELS, CENTERED IN SLAB. PROVIDE 6" x 1'-0" DEEP BLOCKOUT (LEDGE) @ GRADE BEAM FOR SLAB.
3. REINFORCE SLAB w/ #4 @ 12" EACH WAY, TOP & BOTTOM

GRADE BEAM SCHEDULE

Mark	Size		Reinforcing Steel								Clearance		
				Top Bars			Side Bars (Ea. Face)	Stirrups					
	Width (in.)	Depth (in)	Bottom Bars	Left Support	Cont.	Right Support		Size	Type	Spacing	Top (in.)	Bottom (in.)	Side (in.)
GB1	42	60	6#11	6#11	6#11	6#11	3#8	#5	▭	10"	2"	3"	2"

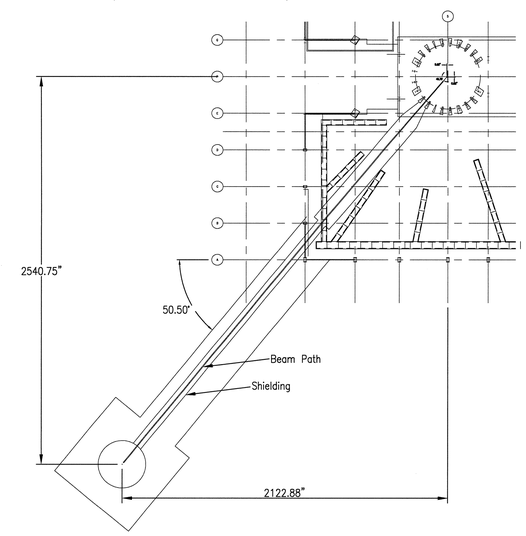

2 S2.01.50 INSTRUMENT BUILDING LOCATION LAYOUT

NONE

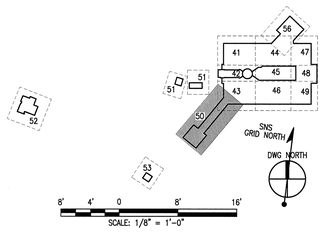

NO REPRESENTATION OR WARRANTY, EXPRESSED OR IMPLIED, IS MADE AS TO THE ACCURACY, COMPLETENESS OR USEFULNESS OF THE INFORMATION OR STATEMENTS CONTAINED IN THESE DRAWINGS, OR THAT THE USE OR DISCLOSURE OF ANY INFORMATION, APPARATUS, METHOD, OR PROCESS DISCLOSED IN THESE DRAWINGS MAY NOT INFRINGE PRIVATE RIGHTS OF OTHERS. NO LIABILITY IS ASSUMED WITH RESPECT TO THE USE OF, OR FOR DAMAGES RESULTING FROM THE USE OF ANY INFORMATION, APPARATUS, METHOD, OR PROCESS DISCLOSED IN THESE DRAWINGS. DRAWINGS MADE AVAILABLE FOR INFORMATION TO BIDDER ARE NOT TO BE USED FOR OTHER PURPOSES AND ARE TO BE RETURNED UPON REQUEST OF THE FORWARDING CONTRACTOR.

NUMBER OF SECTION OR DETAIL

DRAWING ON WHICH SECTION OR DETAIL IS SHOWN OR TAKEN

SECTION AND DETAIL KEY

THIS DOCUMENT CONTROLLED BY

CHANGE CONTROL SYSTEM 3

ENGINEERING PROCEDURE SNS-ENG-G001

REV	CHANGE TYPE	CHANGE CONTROL SYSTEM	CHANGE REQUEST NUMBER	DESCRIPTION	DSN	CHK	DEPT	DATE	PE	DATE	PJ	DATE	REQ	DATE	UTB	DATE	RPE	RPE NO	DATE	ST	CV	EC	EE	EM	IE	M	PD	SE	AR
1				CERTIFIED FOR CONSTRUCTION – 10/26/01	GPR	REW				11/15/01	RAD	11/16/01				11/16/01	JJB	23236	11/13/01	REW		WRS	AK	WRS	BWJ		MP		ED
0				PILES CERTIFIED FOR CONSTRUCTION – 02/15/01	GPR	SC			CLG	2/19/01	RAD	2/19/01			JRL	2/19/01	JJB	23236	2/15/01	SC		WRS	RL	WRS	BWS		MP		WAS

REVISION OR ISSUE PURPOSE — REVISION APPROVALS — SQUAD CHECK

RPE: JOHN BUSCH, REGISTERED ENGINEER, AGRICULTURE, COMMERCE, NO. 23236, STATE OF TENNESSEE

REV. 1 DATE 11/15/01

DSN	G. REDDY	2/15/01
DRW	G.MARSZALEK	2/15/01
CHK	R.WALKINGTON	2/15/01
DEPT		
PE	C. GARREN	2/19/01
PJ	R. DEAN	2/19/01
REQ		
UTB	J. LAWSON	2/19/01

DRAWING APPROVALS

108030700-S8E-8702-A001

Knight Jacobs — Knight/Jacobs Joint Venture, 701 Scarboro Road, MS 8253, Oak Ridge, TN 37830, 865-241-9433, fax 865-241-3400

KNIGHT — Knight Advanced Technology, 540 West Randolph Street, Chicago, IL 60661

UT-BATTELLE — Oak Ridge National Laboratory managed for the DEPARTMENT OF ENERGY under U.S. GOVERNMENT contract DE-AC05-00OR22725 UT-BATTELLE, LLC, © Oak Ridge, Tennessee

PROJECT NAME: SPALLATION NEUTRON SOURCE

BUILDING 2TU
FOUNDATION PLAN
LEVEL 1, SECTOR 50

1	48	49	50	PLANT	BLDG	FL	SH.	OF	TYPE	CLASS
3	S	X	X	8	8702		1	1	P	U

51	52	53	WBS		REV
NC	NA		1.8.3.7	S2.01.50	1

Date: 11/13/2001 Time: 15:37:11
Username: DUNOTE
S:_KSJ2\PROJECTS\1000\700_DAGS\NSA_SA\740_PLOT\S2-01-10.DWG