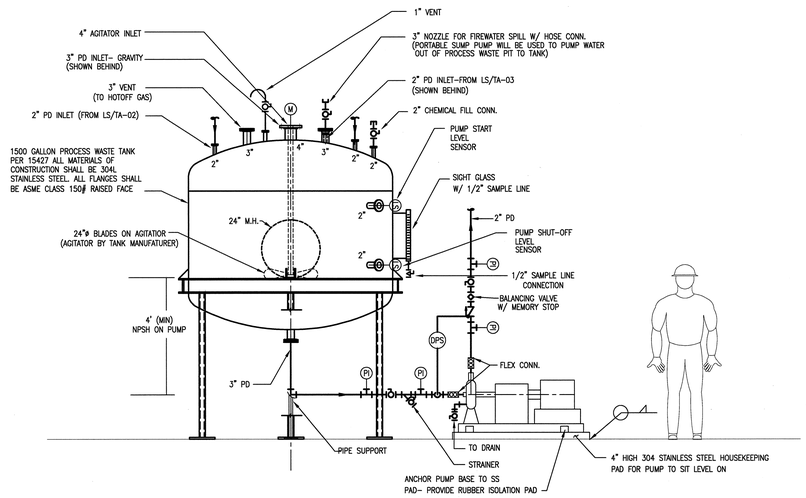

1 PROCESS WASTE HOLDING TANK & PUMP DETAIL
NOT TO SCALE

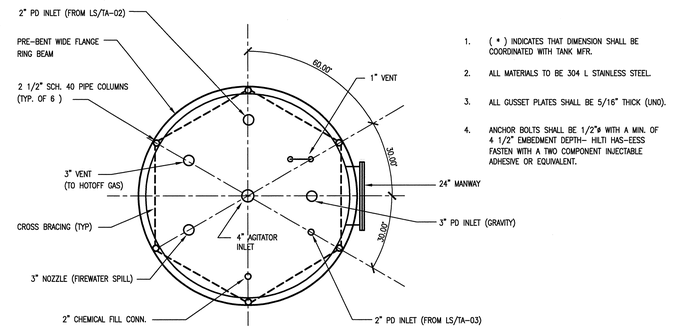

1. (*) INDICATES THAT DIMENSION SHALL BE COORDINATED WITH TANK MFR.
2. ALL MATERIALS TO BE 304 L STAINLESS STEEL.
3. ALL GUSSET PLATES SHALL BE 5/16" THICK (UNO).
4. ANCHOR BOLTS SHALL BE 1/2"ø WITH A MIN. OF 4 1/2" EMBEDMENT DEPTH- HILTI HAS-EESS FASTEN WITH A TWO COMPONENT INJECTABLE ADHESIVE OR EQUIVALENT.

PLAN- PROCESS WASTE TANK SUPPORT FRAME
NOT TO SCALE

DWG NORTH

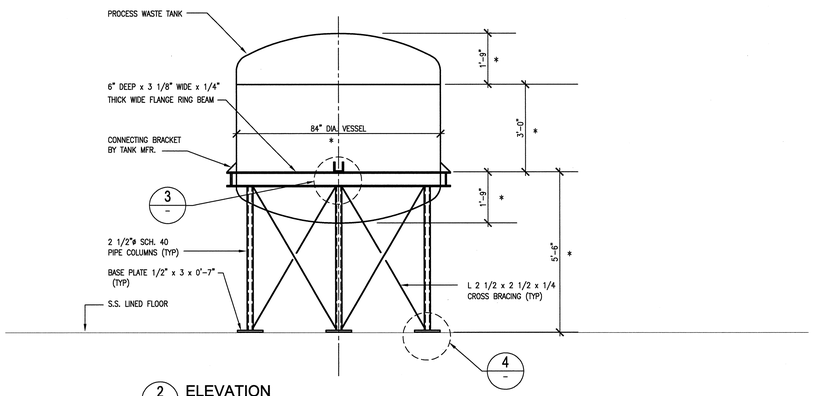

2 ELEVATION
NOT TO SCALE

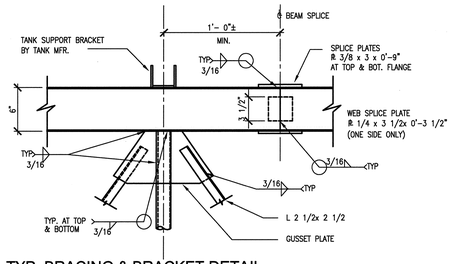

3 TYP. BRACING & BRACKET DETAIL
NOT TO SCALE

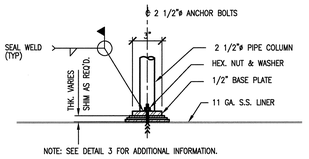

4 TYP. BASE PLATE DETAIL
NOT TO SCALE

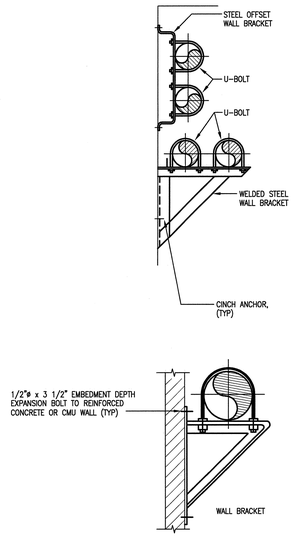

5 TYP. PIPE SUPPORT DETAIL
NOT TO SCALE

NO REPRESENTATION OR WARRANTY, EXPRESSED OR IMPLIED, IS MADE AS TO THE ACCURACY, COMPLETENESS OR USEFULNESS OF THE INFORMATION OR STATEMENTS CONTAINED IN THESE DRAWINGS, OR THAT THE USE OR DISCLOSURE OF ANY INFORMATION, APPARATUS, METHOD, OR PROCESS DISCLOSED IN THESE DRAWINGS MAY NOT INFRINGE PRIVATE RIGHTS OF OTHERS. NO LIABILITY IS ASSUMED WITH RESPECT TO THE USE OF, OR FOR DAMAGES RESULTING FROM THE USE OF ANY INFORMATION, APPARATUS, METHOD, OR PROCESS DISCLOSED IN THESE DRAWINGS. DRAWINGS MADE AVAILABLE FOR INFORMATION TO BIDDER ARE NOT TO BE USED FOR OTHER PURPOSES AND ARE TO BE RETURNED UPON REQUEST OF THE FORWARDING CONTRACTOR.

NUMBER OF SECTION OR DETAIL
DRAWING ON WHICH SECTION OR DETAIL IS SHOWN OR TAKEN
SECTION AND DETAIL KEY

THIS DOCUMENT CONTROLLED BY
CHANGE CONTROL SYSTEM 4
ENGINEERING PROCEDURE SNS-ENG-G001

REV	CHANGE TYPE	CHANGE CONTROL SYSTEM	CHANGE REQUEST NUMBER	DESCRIPTION	DSN	CHK	DEPT	DATE	PE	DATE	PJ	DATE	REQ	DATE	UTB	DATE	RPE	RPE NO	DATE	ST	CV	EC	EE	EM	IE	M	PD	SE	AR
0				CERTIFIED FOR CONSTRUCTION – 10/26/01	MMK	BWJ			(RJ)	11/15/01	RAD	11/16/01			MP	11/16/01	BWJ	105869	10/26/01	REW	–	WRS	AK	WRS	BWJ	–	MP	–	ED

REVISION OR ISSUE PURPOSE — REVISION APPROVALS — SQUAD CHECK

RPE: BRUCE W. JOHNSON, REGISTERED ENGINEER, CIVIL, No. 00105860, STATE OF TENNESSEE
0 10/26/01
REV. DATE

DSN	M. KEHOE	10/26/01
DRW	M. IGNACIO	10/26/01
CHK	B. JOHNSON	10/26/01
DEPT		
PE		11/15/01
PJ		11/16/01
REQ		
UTB		11/16/01

DRAWING APPROVALS

108030700-P8E-8700-A089

Knight Jacobs
Knight/Jacobs Joint Venture
701 Scarboro Road, MS 8253
Oak Ridge, TN 37830
865-241-9433
fax 865-241-3400

KNIGHT
Knight Advanced Technology
1453 Mission Street
San Francisco, CA 94103

UT-BATTELLE
Oak Ridge National Laboratory
managed for the DEPARTMENT OF ENERGY under
U.S. GOVERNMENT contract DE-AC05-00OR22725
UT-BATTELLE, LLC. ® Oak Ridge, Tennessee

PROJECT NAME:
SPALLATION NEUTRON SOURCE

STANDARD PLUMBING DETAILS, TARGET
SHEET 6 OF 6

1	48	49	50	PLANT	BLDG	FL	SH.	OF	TYPE	CLASS
3	P	X	X	8	8700		1	1	S	U
51		52		53	WBS		P6.10.06			REV
NC		NA			1.8.3.7					0

Date: 10/23/2001 Time: 18:07:03
Username: CJAC
H:\SNS_ELS\PROJECTS\7000\700_CAD\700K_GEN\M_PLP\PJN-10-06.DWG