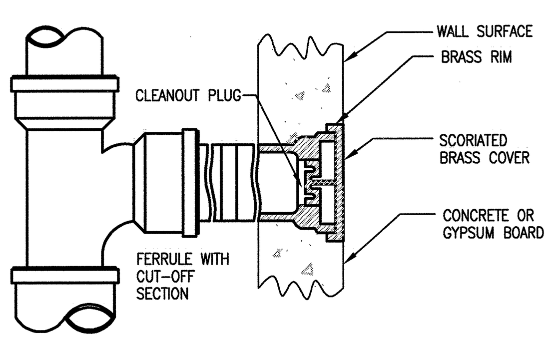

50 / – WALL CLEAN-OUT DETAIL
NOT TO SCALE

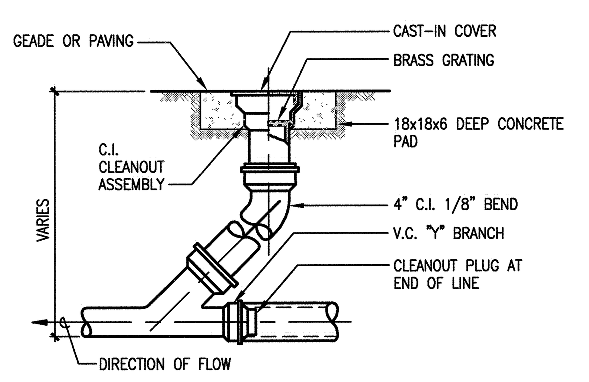

42 / – CLEAN-OUT TO GRADE DETAIL
NOT TO SCALE

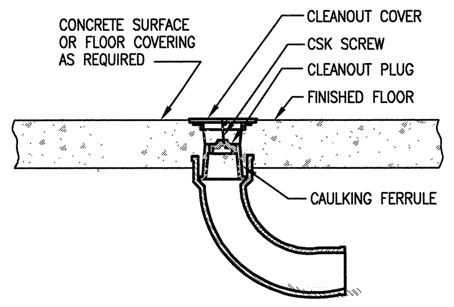

34 / – FLOOR CLEAN-OUT DETAIL
NOT TO SCALE

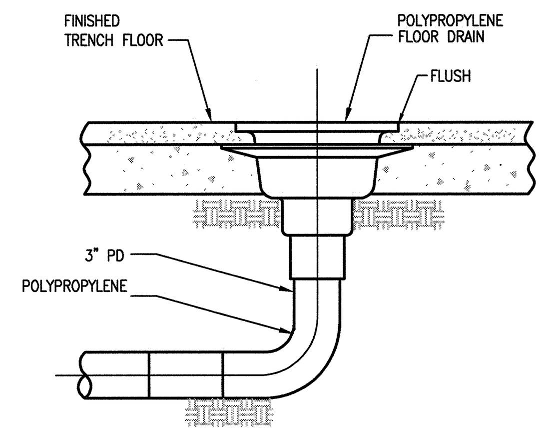

26 / – FLOOR DRAIN DETAIL (FD-2)
NOT TO SCALE

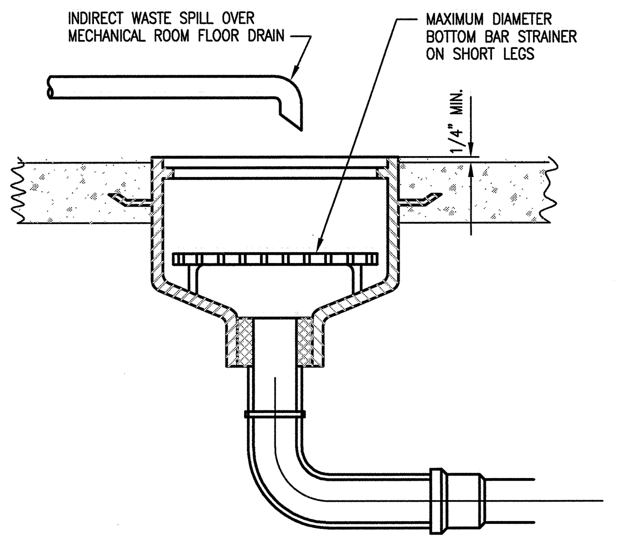

18 / – EQUIP. ROOM FLOOR SINK (FS-1) WITH INDIRECT WASTE DETAIL
NOT TO SCALE

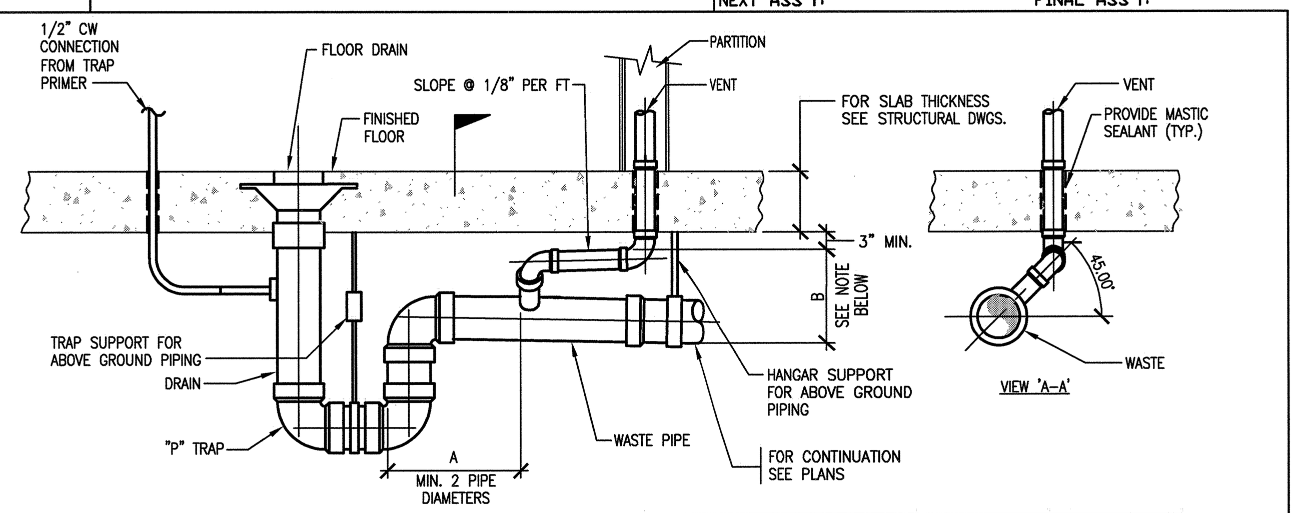

WASTE SIZE	VENT SIZE	'A' MAX	'A' SLOPE "/FT	'B'
2"	1-1/4"	8'-0"	1/4	8"±
3"	1-1/2"	10'-0"	1/8	10-1/2"±
4"	2"	12'-0"	1/8	10-1/2"±

NOTE: DIMENSION 'B' DOES NOT INCLUDE FALL DUE TO SLOPE, ADD FALL DUE TO VENT SLOPE TO OBTAIN INVERT ELEVATION.

10 / – FLOOR DRAIN WITH TRAP PRIMER DETAIL (FD-1)
NOT TO SCALE

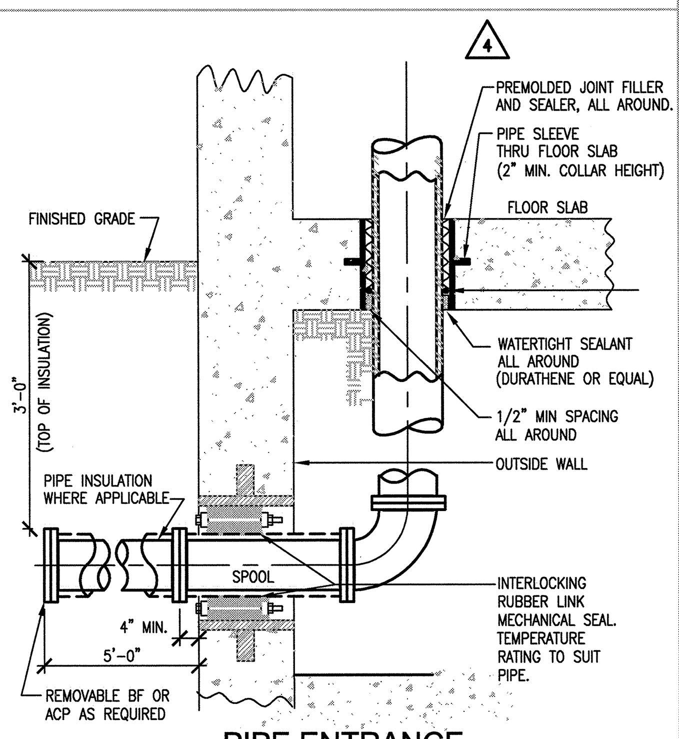

52 / – PIPE ENTRANCE PENETRATION WITHOUT VAULT
NOT TO SCALE

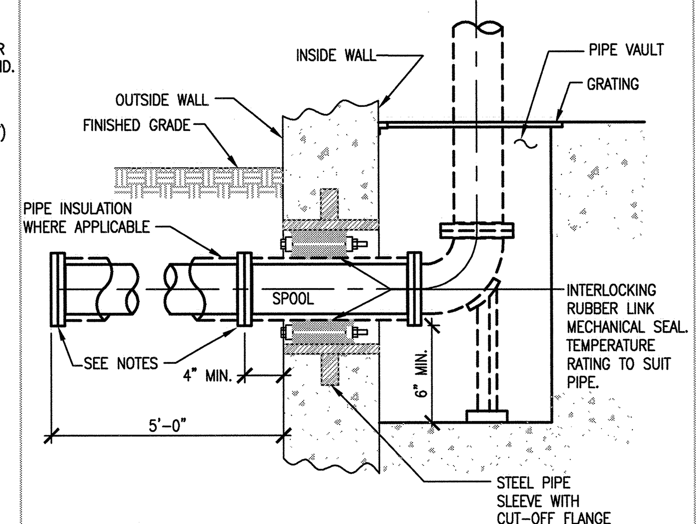

NOTE: 1. PROVIDE REMOVABLE CAP OR PLUG FOR 3" AND SMALLER PIPING.
2. PROVIDE BLIND-FLANGE FOR 4" AND ABOVE PIPING.
3. TYPICAL FOR: CHW, HW, TW AND CA.

44 / PIPE ENTRANCE PENETRATION TO BLDG. @ VAULT
NOT TO SCALE

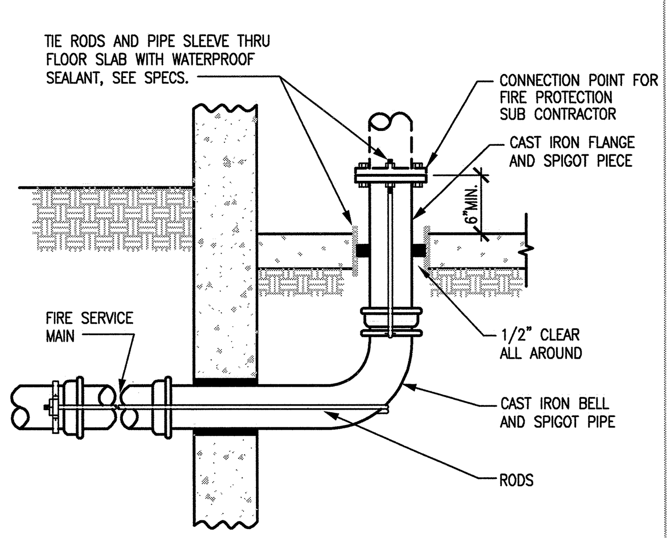

36 / – FIRE MAIN PIPING ENTRANCE TO BUILDING DETAIL
SCALE: NOT TO SCALE

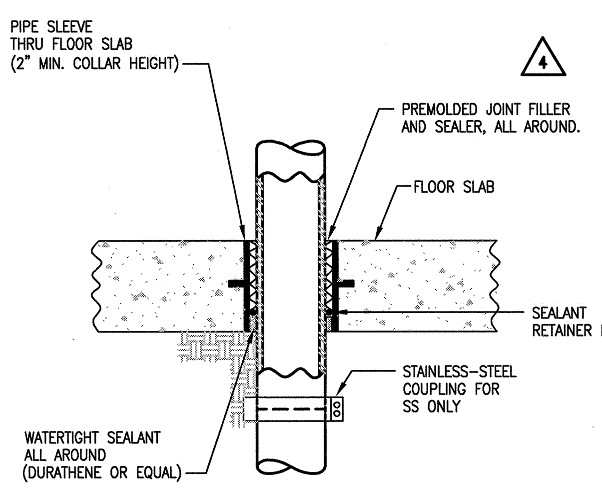

NOTE: TYPICAL FOR: SS (CAST IRON)
PD (FRP), PD TARGET – POLYPROPYLENE
PW/PCW (COPPER/STEEL)
VENT AND SWC (TYPE K – COPPER)

28 / – PIPING PENETRATION THRU FLOOR DETAIL
NOT TO SCALE

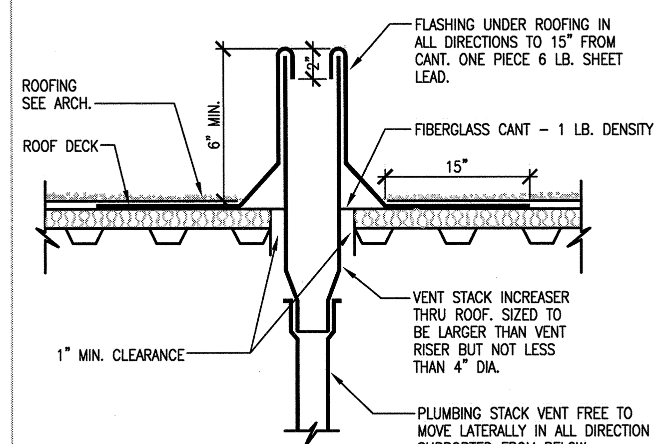

20 / – VENT THRU ROOF DETAIL
NOT TO SCALE

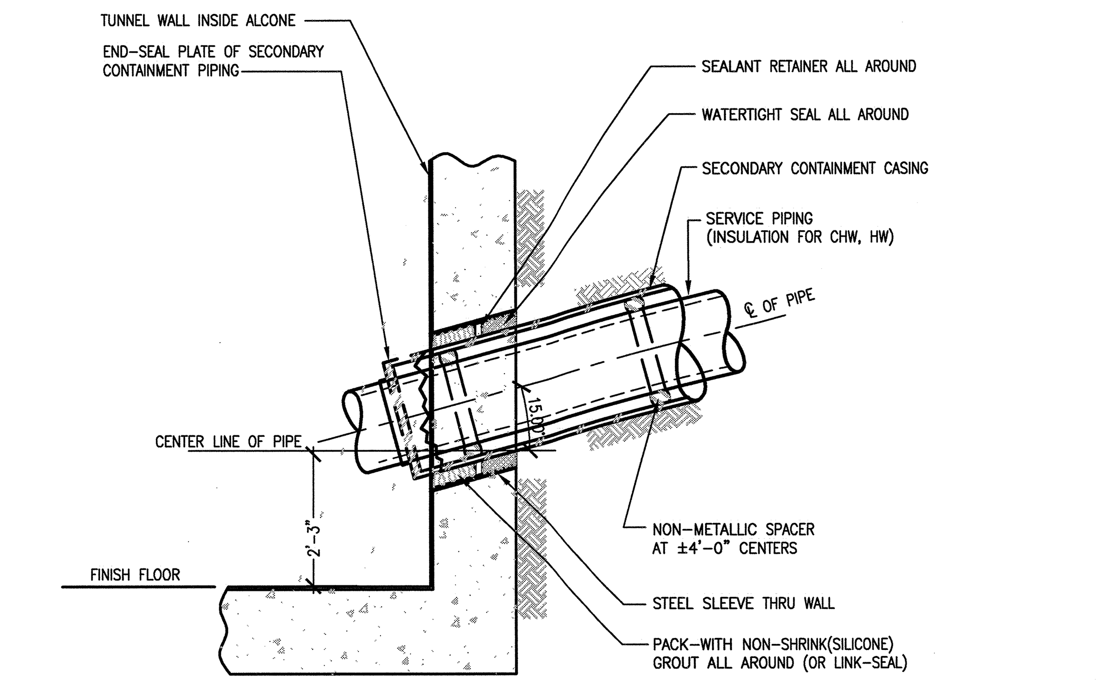

12 / – DOUBLE-CONTAINED PIPING PENETRATION THRU TUNNEL WALL DETAIL
NOT TO SCALE
THIS DETAIL IS NOT IN THE TARGET BUILDING SUBSTRUCTURES PACKAGE

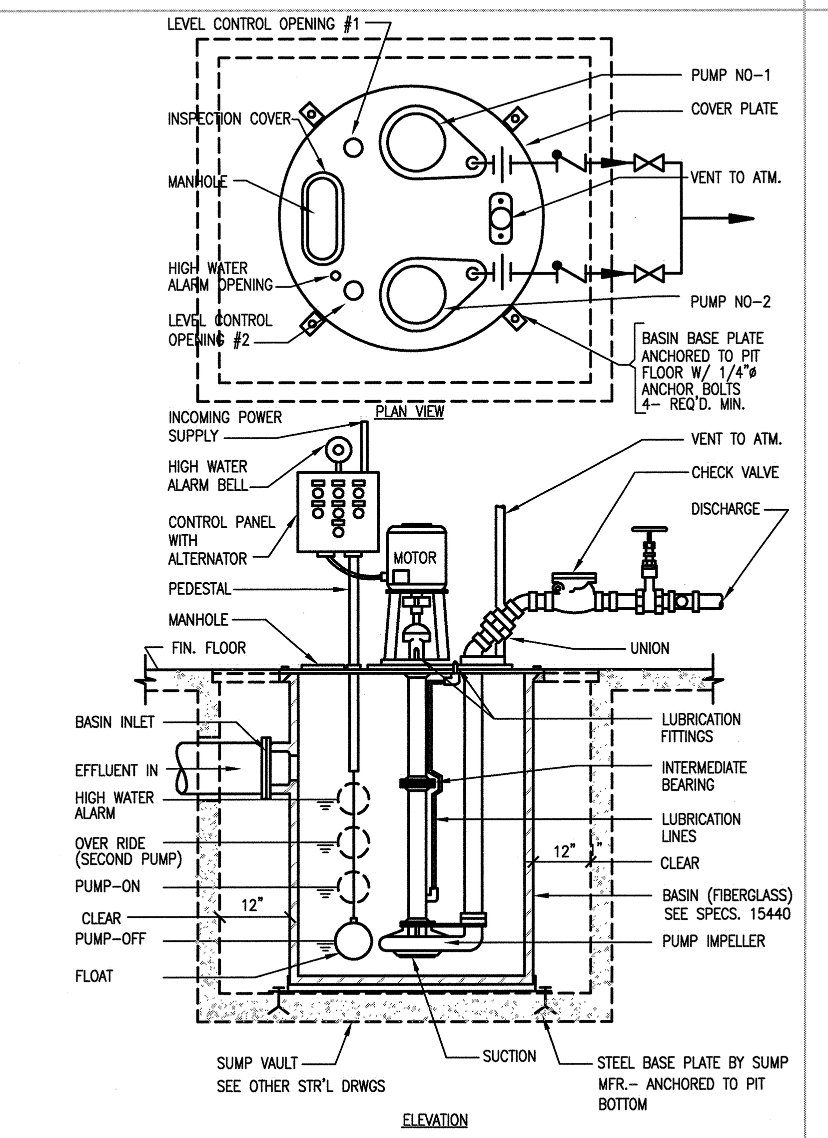

55 / – VERTICAL LIFT DUPLEX SEWAGE EJECTOR
NOT TO SCALE

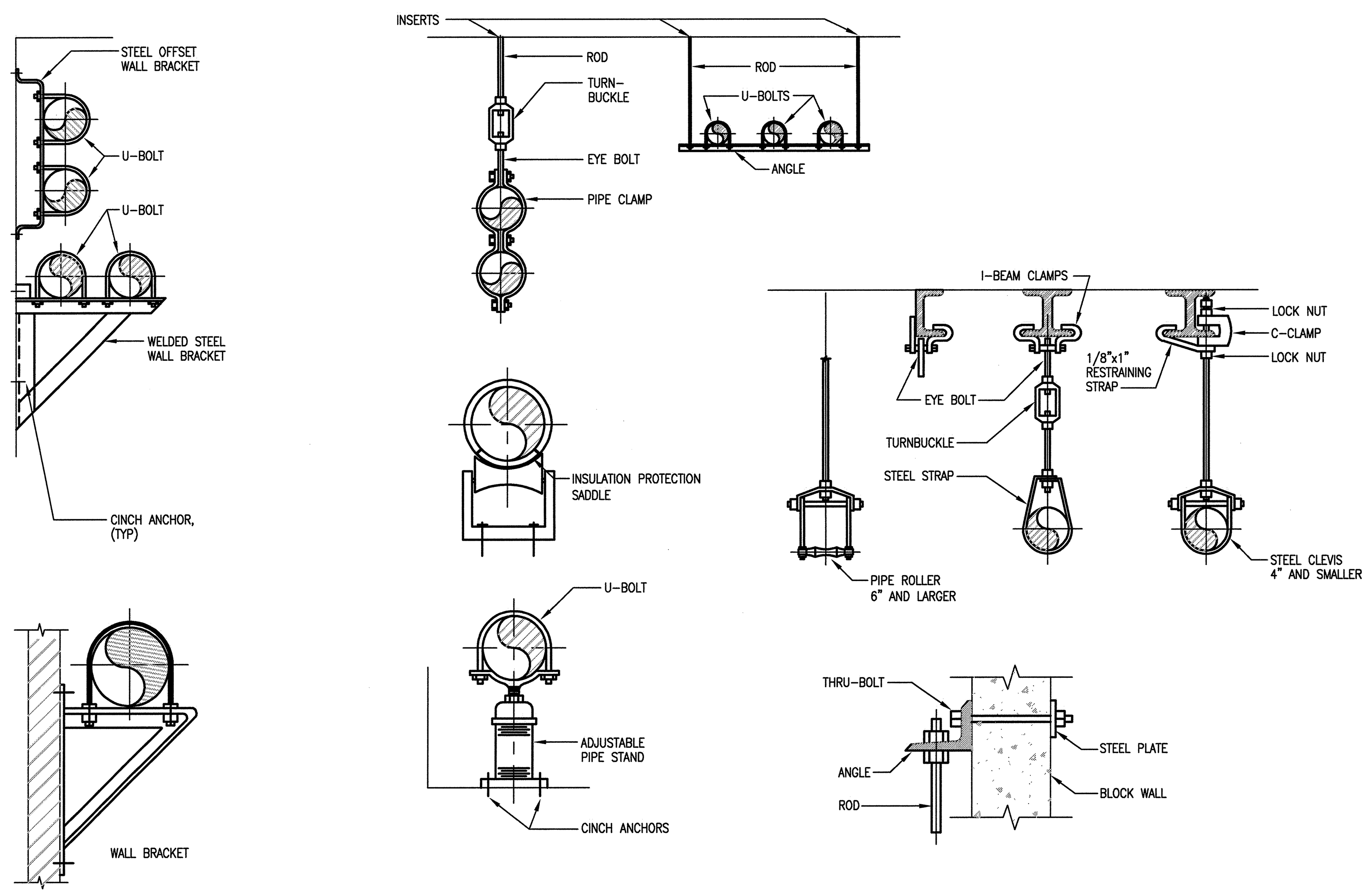

47 / – PIPE SUPPORTS DETAILS
NOT TO SCALE

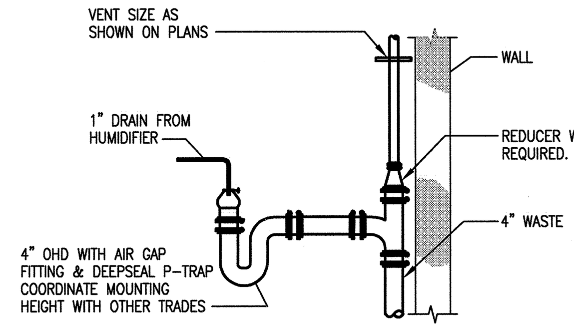

21 / – OPEN HUB DRAIN DETAIL
NOT TO SCALE

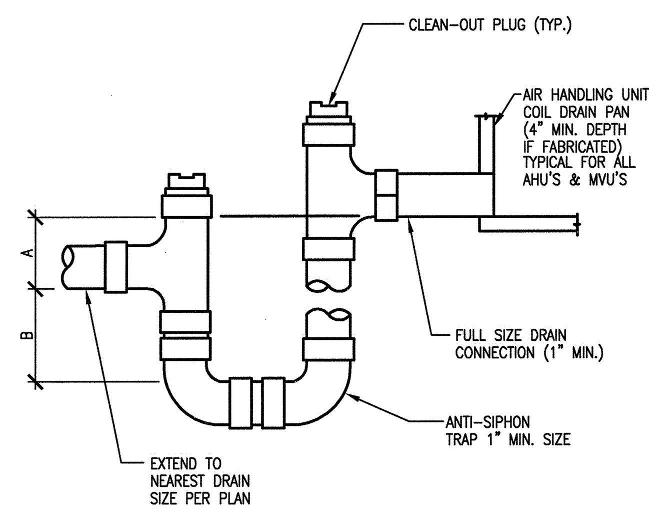

NOTES: 1. FOR BLOW THRU:
A = 1" MIN.
B = FAN DISCHARGE S.P. + 1"

2. FOR DRAW THRU:
A = 4" MIN.
B = FAN SUCTION S.P. + 1"

23 / – COIL DRAIN TRAP DETAIL
NOT TO SCALE

WHEN CLEARANCE THROUGH WALLS, FLOORS ETC IS PROVIDED FOR AUTOMATIC SPRINKLER PIPING WITH A PIPE SLEEVE, THE SLEEVE MUST HAVE A NOMINAL DIAMETER 2" LARGER THAN THE PIPE FOR SIZES 1" TO 3". FOR PIPE SIZES 4" AND ABOVE THE DIAMETER OF THE SLEEVE MUST BE AT LEAST 4" LARGER THAN THE PIPE DIAMETER. SEE NFPA 4-14.4.3.4.1.

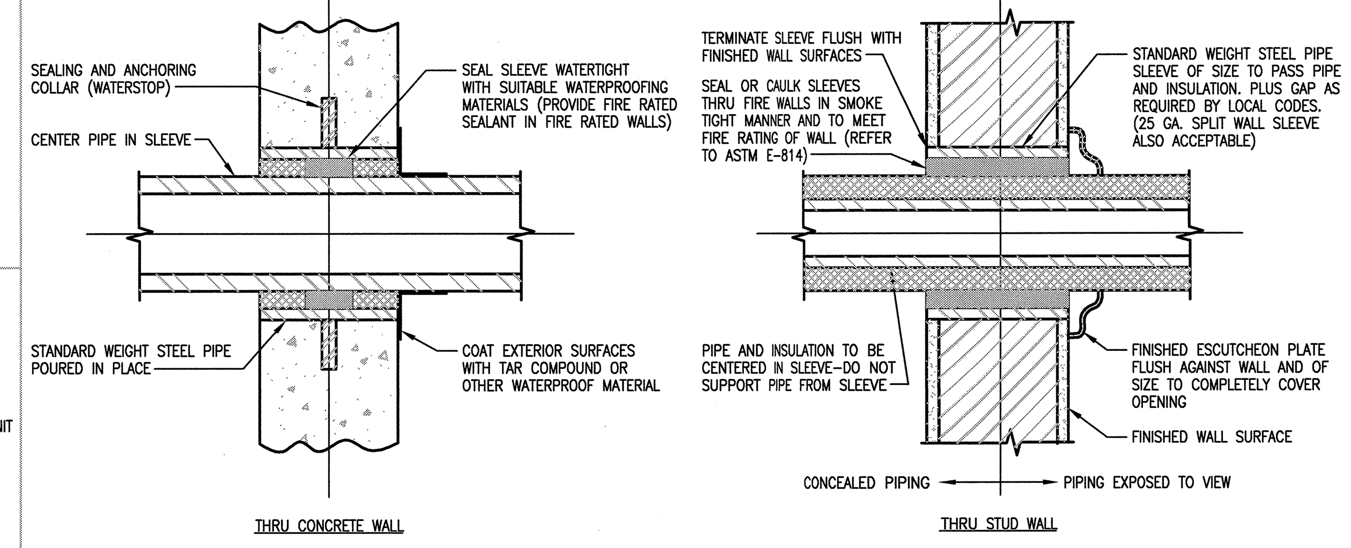

14 / – PIPE SLEEVE DETAIL
NOT TO SCALE

DETAILS 10, 34, 52, 26, 28, 36, 14 – IN TARGET BUILDING SUBSTRUCTURES PACKAGE

NO REPRESENTATION OR WARRANTY, EXPRESSED OR IMPLIED, IS MADE AS TO THE ACCURACY, COMPLETENESS OR USEFULNESS OF THE INFORMATION OR STATEMENTS CONTAINED IN THESE DRAWINGS, OR THAT THE USE OR DISCLOSURE OF ANY INFORMATION, APPARATUS, METHOD, OR PROCESS DISCLOSED IN THESE DRAWINGS MAY NOT INFRINGE PRIVATE RIGHTS OF OTHERS. NO LIABILITY IS ASSUMED WITH RESPECT TO THE USE OF, OR FOR DAMAGES RESULTING FROM THE USE OF ANY INFORMATION, APPARATUS, METHOD, OR PROCESS DISCLOSED IN THESE DRAWINGS. DRAWINGS MADE AVAILABLE FOR INFORMATION TO BIDDER ARE NOT TO BE USED FOR OTHER PURPOSES AND ARE TO BE RETURNED UPON REQUEST OF THE FORWARDING CONTRACTOR.

SECTION AND DETAIL KEY: NUMBER OF SECTION OR DETAIL / DRAWING ON WHICH SECTION OR DETAIL IS SHOWN OR TAKEN

THIS DOCUMENT CONTROLLED BY
CHANGE CONTROL SYSTEM 4
ENGINEERING PROCEDURE SNS-ENG-G001

REV	CHANGE TYPE	CHANGE CONTROL SYSTEM	CHANGE REQUEST NUMBER	DESCRIPTION	DSN	CHK	DEPT	DATE	PE	DATE	PJ	DATE	REQ	DATE	UTB	DATE	RPE	RPE NO	DATE		ST	CV	EC	EE	EM	IE	M	PD	SE	AR
7				TARGET – CERTIFIED FOR CONSTRUCTION – 10/26/01	MMK	BWJ			CJN	11/15/01	RAD	11/13/01			[illegible]	11/14/01	BWJ	105869	10/26/01		REW	–	WRS	AK	WRS	BWJ	–	MP	–	ED
6				BASIS OF AWARD – 10/03/01	MI	BS			CJG	10/9/01	TM	10/8/01			JRL	10/9/01	BWJ	105869	10/3/01		SC	AW	BS	RL	BS	BJ	–	BS	–	WS
5				CERTIFIED FOR CONSTRUCTION – 8/3/01	MMK	BWJ			CJG	8/9/01	RAD	8/6/01			JRL	8/7/01	BWJ	105869	8/3/01		REW	–	WRS	RL	WRS	BWJ	–	RM	–	WAS
4				CERTIFIED FOR CONSTRUCTION – 7/27/01	MI	BS			CJG	7/27/01							BWJ	105869	7/27/01		SC	AW	BS	RL	BS	BJ	–	BS	–	WS
3				CERTIFIED FOR CONSTRUCTION – 7/13/01	MI	BS			CJG	7/13/01							BWJ	105869	7/13/01		SC	AW	BS	RL	BS	BJ	–	BS	–	WS
2	–	–	–	CERTIFIED FOR CONSTRUCTION – 6/27/01	MI	BS			CJG	6/28/01	TM	6/28/01			JRL	6/28/01	BWJ	105869	6/27/01		SC	AW	BS	RL	BS	BJ	–	BS	–	WS
1				TARGET – SUBSTRUCTURES CERTIFIED FOR CONSTRUCTION – 4/18/01	MK	BS			CJG	4/18/01	TM	4/18/01			JRL	4/18/01	BWJ	105869	4/18/01		SC	AW	BS	RL	BS	BJ	–	BS	–	WS
0				CFC FE/LN SUBSTRUCTURE SUBMITTAL – 3/30/01	MI	BS			CJG	4/6/01	TM	4/6/01			JRL	4/6/01	BWJ	105869	3/30/01		SC	AW	BS	RL	BS	BJ	–	BS	–	WS

REVISION OR ISSUE PURPOSE — REVISION APPROVALS — SQUAD CHECK

RPE: BRUCE W. JOHNSON REGISTERED ENGINEER AGRICULTURE COMMERCE No. 00105869 STATE OF TENNESSEE
7 REV. — 10/26/01 DATE

DRAWING APPROVALS		
DSN	M.IGNACIO	3/30/01
DRW	M. IGNACIO	3/30/01
CHK	B. JOHNSON	3/30/01
DEPT		
PE	C.GARREN	4/6/01
PJ	T.MCLAUGHLIN	4/6/01
REQ		
UTB	JR LAWSON	4/6/01

108030000-P8E-8000-A001

Knight/Jacobs Joint Venture
701 Scarboro Road, MS 8253
Oak Ridge, TN 37830
865-241-9433
fax 865-241-3400

KNIGHT
Knight Advanced Technology
1453 Mission Street
San Francisco, CA 94103

UT-BATTELLE
Oak Ridge National Laboratory
managed for the DEPARTMENT OF ENERGY under U.S. GOVERNMENT contract DE-AC05-00OR22725
UT-BATTELLE, LLC, Oak Ridge, Tennessee

PROJECT NAME:
SPALLATION NEUTRON SOURCE

STANDARD
PLUMBING DETAILS
SHEET 1 OF 6

1	48	49	50	PLANT	BLDG	FL	SH.	OF	TYPE	CLASS
3	P	X	X	8	8000		1	1	S	U
51	52		53		WBS					REV
NC	NA				1.8.3	P6.10.01				7

Date: 10/25/2001 Time: 14:09:39
Username: KEHOEM
KGSFO_VOL2:PROJECTS\7000\700_CADD\TASK_00\740_PLOT\P6-10-01.DWG