NOTES:

1. UNLOADING STATION STAND AND DEWAR FILL STATION TO BE CONSTRUCTED OF 3 X 3 X 1/4 ANGLE.
2. 3" PIPE SIZE U-BOLT FOR 2 1/2" PIPE, 2 1/2" PIPE SIZE U-BOLT FOR 2" PIPE, 1 1/4" PIPE SIZE U-BOLT FOR 1" PIPE, 1" SIZE U-BOLT FOR 3/4" PIPE. GRINNELL FIG 137 W/4 NUTS AND MICARTA G10 OR FR-4 X 1/2" THK SLIDE PLATE MAINTAIN CONSTANT CLEARANCE AROUND PIPE
3. TEMP ELEMENT TO CONSIST OF THERMOWELL AND REMOTE MEASUREMENT DEVICE AS DESCRIBED ON DWG P7.50.31.
4. ALL SUPPORTS ARE A-36 C.S. UNLESS OTHERWISE NOTED.

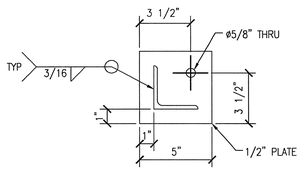

SECTION A-A
SCALE: 3" = 1'-0"

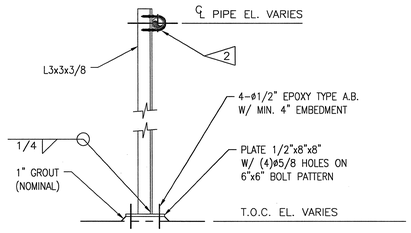

PS-3 FLOOR SUPPORT
SCALE: 1" = 1'-0"

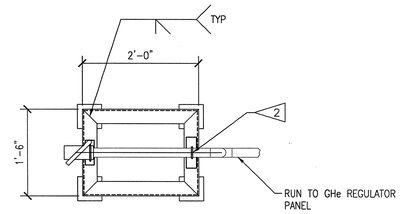

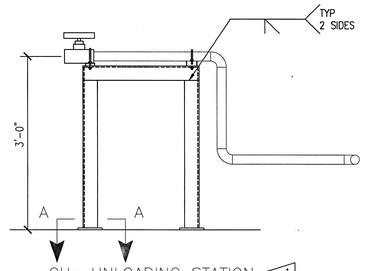

GHe UNLOADING STATION 1
SCALE: 1" = 1'-0"

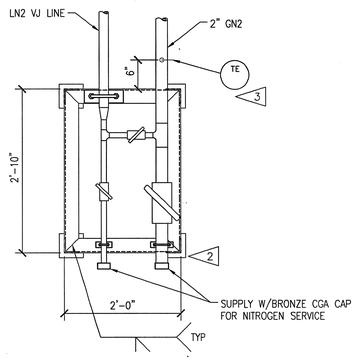

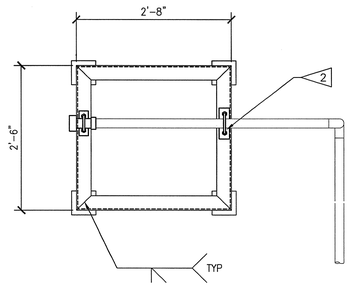

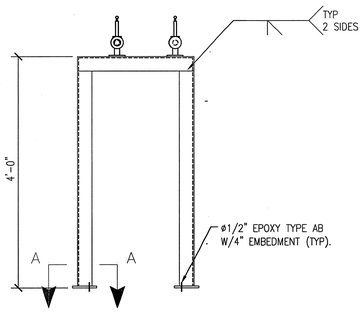

DEWAR FILL STATION 1
SCALE: 1" = 1'-0"

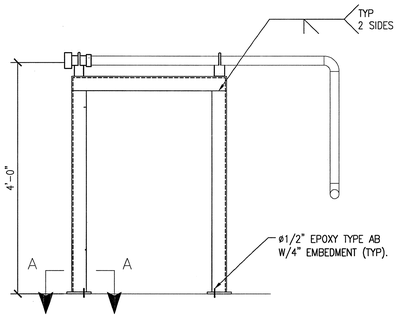

LN2 UNLOADING STATION 1
SCALE: 1" = 1'-0"

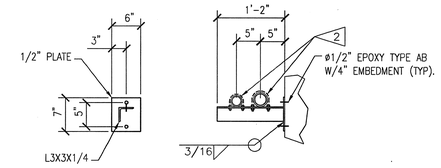

PS-1 WALL SUPPORT
SCALE: 1" = 1'-0"

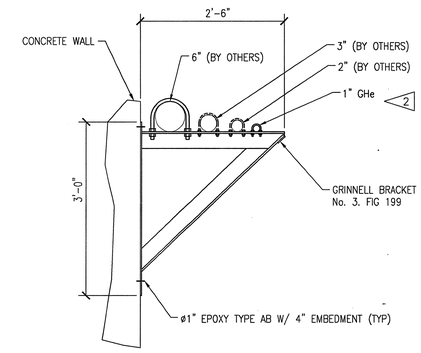

PS-2 WALL SUPPORT
SCALE: 1" = 1'-0"

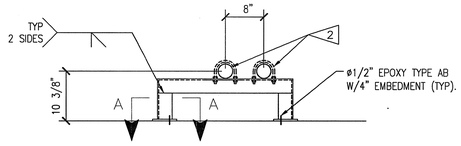

PS-4 FLOOR SUPPORT 1
SCALE: 1" = 1'-0"

1" = 1'-0" 1' 0 1' 2'

108030700-P8E-8700-A084

Knight/Jacobs Joint Venture
701 Scarboro Road, MS 8253
Oak Ridge, TN 37830
865-241-9433
fax 865-241-3400

Sverdrup Technology, Inc.
Tullahoma, TN 37388

UT-BATTELLE
Oak Ridge National Laboratory
managed for the DEPARTMENT OF ENERGY under U.S. GOVERNMENT contract DE-AC05-000R22725
UT-BATTELLE, LLC. ⊕ Oak Ridge, Tennessee

DSN	T.PROFFITT	10/26/01
DRW	T.M.LEANZA	10/26/01
CHK	S.P.KINARD	10/26/01
DEPT		
PE		11/15/01
PJ		11/13/01
REQ		
REV.	DATE	
UTB		11/16/01

PROJECT NAME:
SPALLATION NEUTRON SOURCE
TARGET UTILITY BUILDING
GHE TRUCK FILL AND LN2
REDUCING STATION SECTIONS & VIEWS

1	48	49	50	PLANT	BLDG	FL	SH.	OF	TYPE	CLASS
3	P	X	X	8	8700		1	1	S	U
51		52		53	WBS					REV
NC		NA			1.8.3.7		P5.10.02			0

REV	CHANGE TYPE	CHANGE CONTROL SYSTEM	CHANGE NOTICE NUMBER	DESCRIPTION	DSN	CHK	DEPT	DATE	PE	DATE	PJ	DATE	REQ	DATE	UTB	DATE	RPE	RPE NO	DATE	ST	CV	EC	EE	EM	IE	M	PD	SE	AR
0				CERTIFIED FOR CONSTRUCTION - 10/29/01	TP	SPK				11/15/01	RPD	11/13/01				11/16/01	TP	100946	10/26/01	REW		WRS	AK	WRS	BWJ		MP		ED

REVISION OR ISSUE PURPOSE — REVISION APPROVALS — SQUAD CHECK — DRAWING APPROVALS

NO REPRESENTATION OR WARRANTY, EXPRESSED OR IMPLIED, IS MADE AS TO THE ACCURACY, COMPLETENESS OR USEFULNESS OF THE INFORMATION OR STATEMENTS CONTAINED IN THESE DRAWINGS, OR THAT THE USE OR DISCLOSURE OF ANY INFORMATION, APPARATUS, METHOD, OR PROCESS DISCLOSED IN THESE DRAWINGS MAY NOT INFRINGE PRIVATE RIGHTS OF OTHERS. NO LIABILITY IS ASSUMED WITH RESPECT TO THE USE OF, OR FOR DAMAGES RESULTING FROM THE USE OF ANY INFORMATION, APPARATUS, METHOD, OR PROCESS DISCLOSED IN THESE DRAWINGS. DRAWINGS MADE AVAILABLE FOR INFORMATION TO BIDDER ARE NOT TO BE USED FOR OTHER PURPOSES AND ARE TO BE RETURNED UPON REQUEST OF THE FORWARDING CONTRACTOR.

NUMBER OF SECTION OR DETAIL
DRAWING ON WHICH SECTION OR DETAIL IS SHOWN OR TAKEN
SECTION AND DETAIL KEY

THIS DOCUMENT CONTROLLED BY
CHANGE CONTROL SYSTEM 3
ENGINEERING PROCEDURE SNS-ENG-G001

P:\8D818\DRAWINGS\TRANSFER\OUT\PROJECTWISE\D1-10-26 (CFC TARGET 8D8D0B2D\WC-P5.1.0.02.DWG lowesejh

AutoCAD