NOTES:

1. SEE SPECIFICATION 11710 FOR VACUUM JACKETED PIPING AND NITROGEN STORGE REQUIREMENTS.
2. SEE SPECIFICATION 15455 FOR NITROGEN PIPING AND COMPONENT REQUIREMENTS.
3. SEE DWG. NO. P5.10.02 FOR PIPE SUPPORT DETAILS.

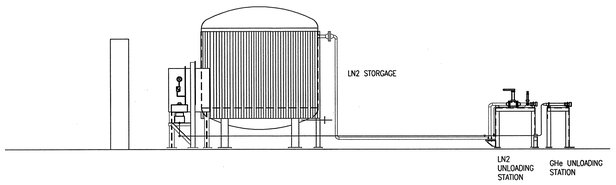

SECTION B P4.B1.51
SCALE 1/4"=1'-0"
LOOKING SOUTHEAST

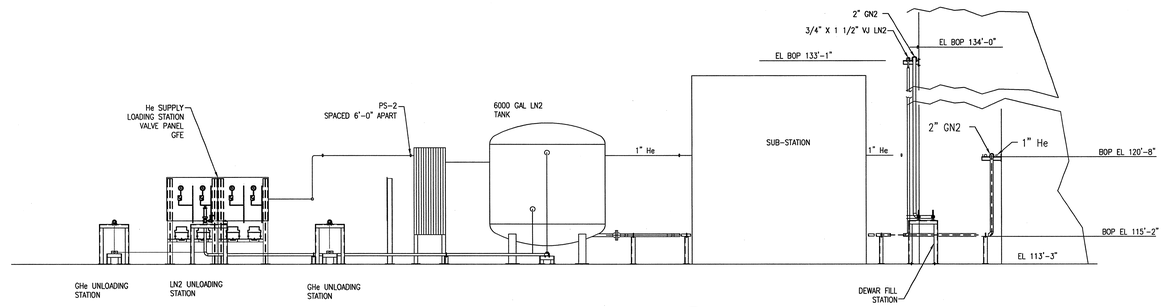

SECTION A P4.B1.51
SCALE 1/4"=1'-0"
LOOKING NORTHEAST

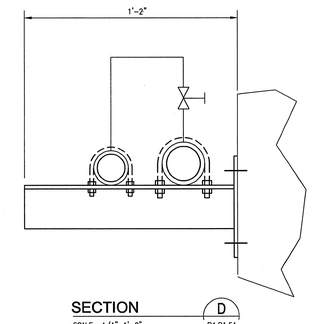

SECTION D P4.B1.51
SCALE 1/4"=1'-0"

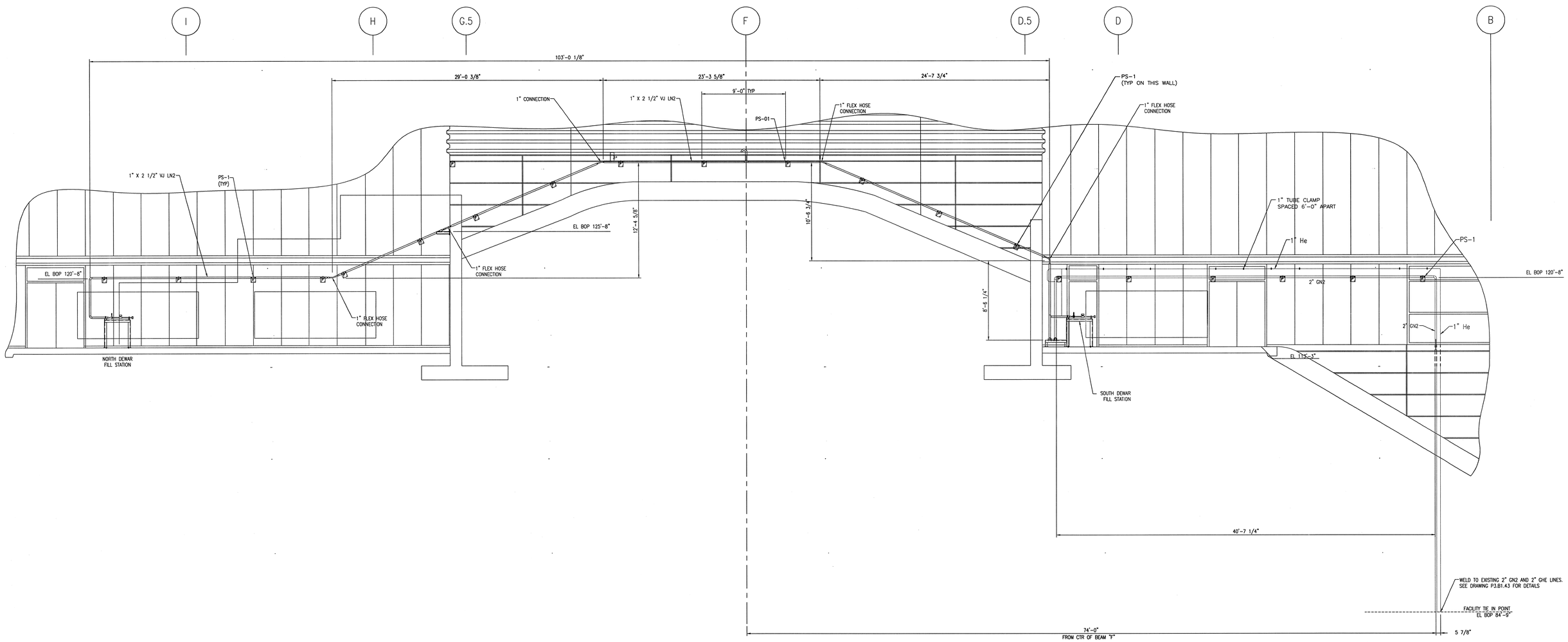

SECTION C P4.B1.51
SCALE 1/4"=1'-0"
LOOKING SOUTHEAST

3/16"=1'-0" 2' 0 2' 4' 6' 10' 14'

108030700-P8E-8700-A083

Knight/Jacobs Joint Venture
701 Scarboro Road, MS 8253
Oak Ridge, TN 37830
865-241-9433
fax 865-241-3400

Sverdrup Technology, Inc.
Tullahoma, TN 37388

UT-BATTELLE
Oak Ridge National Laboratory
managed for the DEPARTMENT OF ENERGY under U.S. GOVERNMENT contract DE-AC05-00OR22725
UT-BATTELLE, LLC. ◆ Oak Ridge, Tennessee

DSN	T. PROFFITT	10/26/01
DRW	T.M. LEANZA	10/26/01
CHK	S.P. KINARD	10/26/01
DEPT		
PE		11/15/01
PJ		11/16/01
REQ		
UTB		11/14/01

RPE
REV. 0 DATE 10/26/01

PROJECT NAME:
SPALLATION NEUTRON SOURCE
TARGET UTILITY BUILDING
GHE TRUCK FILL AND LN2
REDUCING STATION SECTIONS & VIEWS

1	48	49	50	PLANT	BLDG	FL	SH.	OF	TYPE	CLASS
3	P	X	X	8	8700		1	1	S	U
51		52		53	WBS					REV
NC		NA			1.8.3.7		P5.10.01			0

REV	CHANGE ORIG	CHANGE CONTROL SYSTEM	CHANGE REQUEST NUMBER	DESCRIPTION	DSN	CHK	DEPT	DATE	PE	DATE	PJ	DATE	REQ	DATE	UTB	DATE	RPE	RPE NO	DATE		ST	CV	EC	EE	EM	IE	M	PD	SE	AR
0				CERTIFIED FOR CONSTRUCTION - 10/26/01	TP	SPK											TP	100946	10/26/01		REW		WRS	AK	WRS	EWJ		MP		ED

REVISION OR ISSUE PURPOSE — REVISION APPROVALS — SQUAD CHECK — DRAWING APPROVALS

NO REPRESENTATION OR WARRANTY, EXPRESSED OR IMPLIED, IS MADE AS TO THE ACCURACY, COMPLETENESS OR USEFULNESS OF THE INFORMATION OR STATEMENTS CONTAINED IN THESE DRAWINGS, OR THAT THE USE OR DISCLOSURE OF ANY INFORMATION, APPARATUS, METHOD, OR PROCESS DISCLOSED IN THESE DRAWINGS MAY NOT INFRINGE PRIVATE RIGHTS OF OTHERS. NO LIABILITY IS ASSUMED WITH RESPECT TO THE USE OF, OR FOR DAMAGES RESULTING FROM THE USE OF ANY INFORMATION, APPARATUS, METHOD, OR PROCESS DISCLOSED IN THESE DRAWINGS. DRAWINGS MADE AVAILABLE FOR INFORMATION TO BIDDER ARE NOT TO BE USED FOR OTHER PURPOSES AND ARE TO BE RETURNED UPON REQUEST OF THE FORWARDING CONTRACTOR.

NUMBER OF SECTION OR DETAIL
DRAWING ON WHICH SECTION OR DETAIL IS SHOWN OR TAKEN
SECTION AND DETAIL KEY

THIS DOCUMENT CONTROLLED BY
CHANGE CONTROL SYSTEM 3
ENGINEERING PROCEDURE SNS-ENG-G001

P:\80618\DRAWINGS\TRANSFER\OUT\PROJECTWISE\01-10-26 (CFC TARGET 8700CB)\108030700P5.10.01.DWG