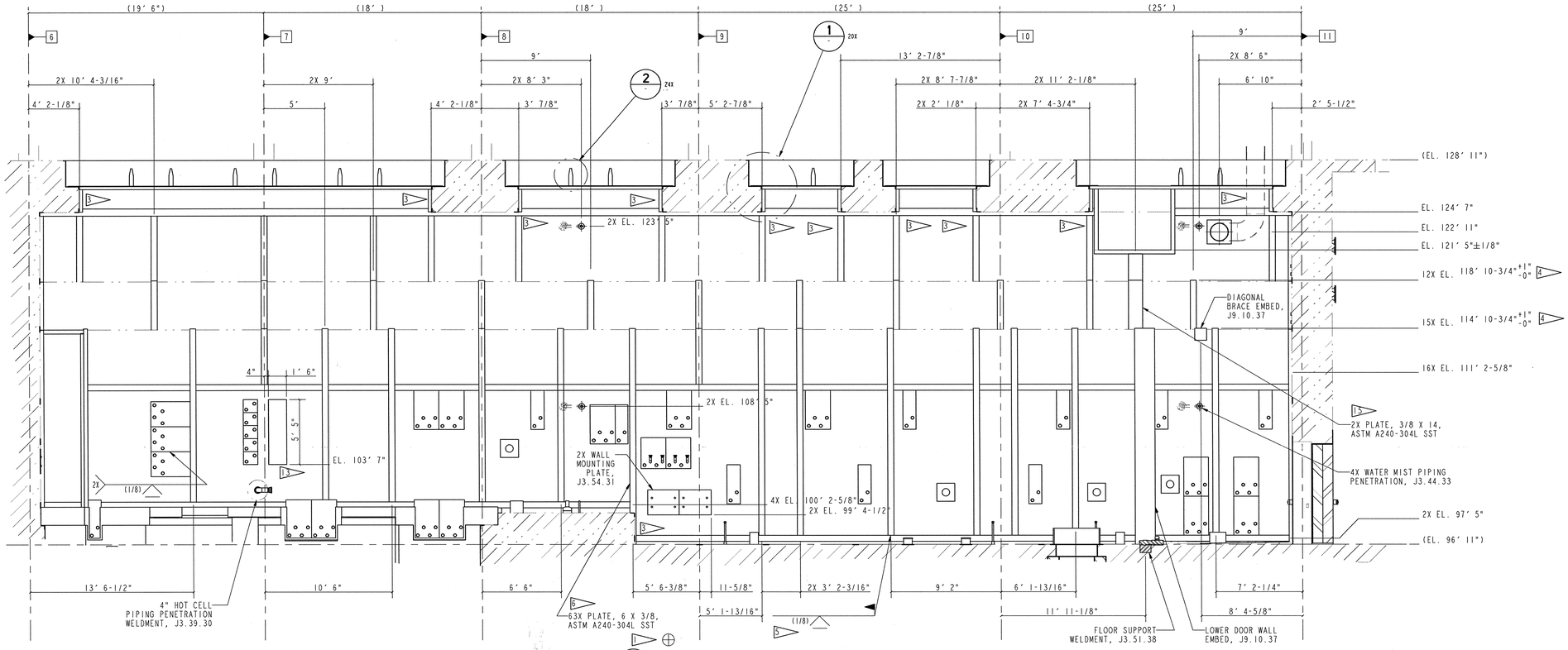

R SECTION
J9.02.45 SCALE: 1/4" = 1'

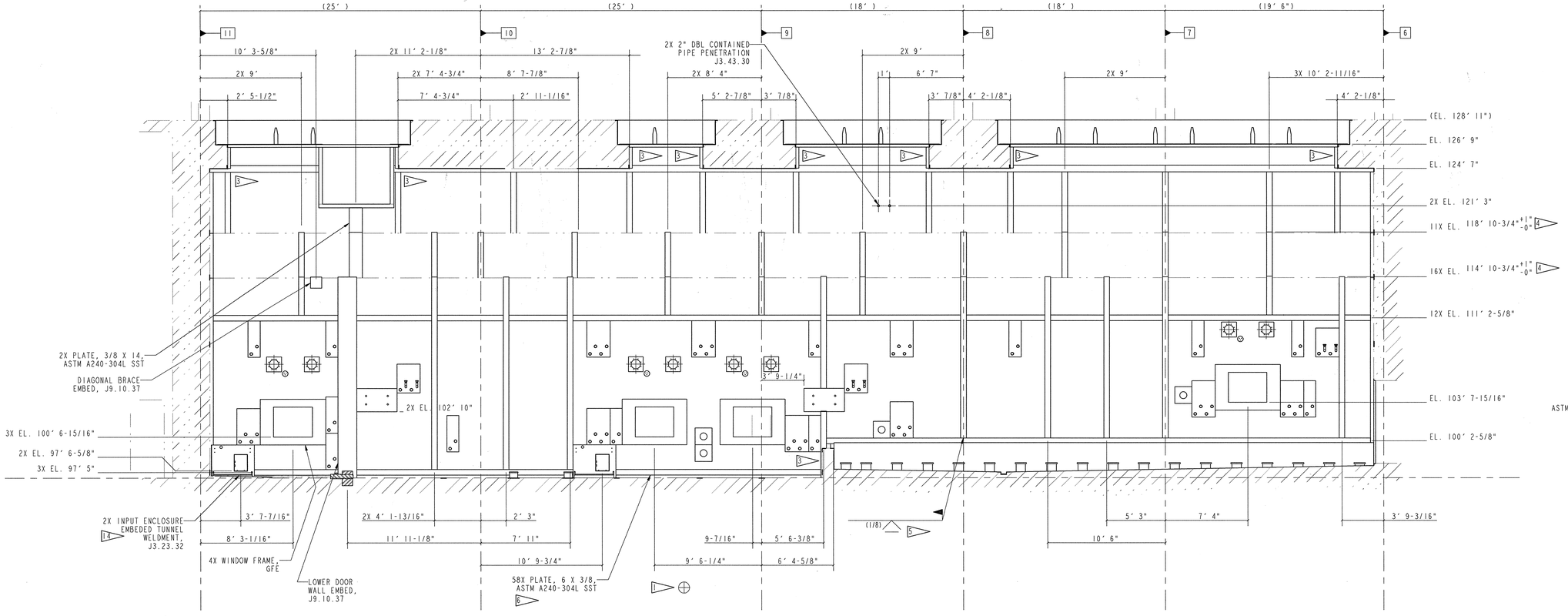

S SECTION
J9.02.45 SCALE: 1/4" = 1'

NOTES:

1. ⊕ DENOTES SAFETY-SIGNIFICANT COMPONENT (SSC). SUBSTITUTIONS FOR SSC COMPONENTS MAY NOT BE MADE WITHOUT THE PROPER AUTHORITY. ALL EMBEDDED COMPONENTS ARE SAFETY SIGNIFICANT.
2. AT EACH CORNER, USE 3/8" DIAMETER BY 4 1/8" LONG 316L NELSON H4L HEADED CONCRETE ANCHORS SPACED ON 12" CENTERS. ANCHORS SHALL BE INSTALLED 45 DEGREES FROM THE LEG OF EACH ANGLE.
3. NOTCH THE EMBED AT EACH CORNER AS SHOWN.
4. THE EMBEDS NOTED WILL ULTIMATELY BE WELDED TO STAINLESS STEEL BASE PLATES THAT ALSO FORM THE SEALED HOT CELL LINER. SET THE EMBEDS ACCURATELY OR CAST THEM LONG AND CUT THEM TO THE PROPER ELEVATION AFTER THE FORMS ARE REMOVED. SEE J8 SERIES DRAWINGS FOR BASE PLATE INSTALLTION DETAILS.
5. ALL EMBED JOINTS SHALL BE WELDED AS NOTED.
6. ANCHOR 6" WIDE EMBEDS USING A SINGLE ROW OF 3/8" DIAMETER BY 4 1/8" LONG 316L NELSON H4L HEADED CONCRETE ANCHORS SPACED ON 12" CENTERS.
7. CONCRETE DIMENSIONS ARE SHOWN ON STRUCTURAL "S" SERIES DRAWINGS. THE EMBEDMENT LOCATION DRAWINGS ARE INTENDED TO INDICATE EMBEDMENTS FOR APPROVAL.
8. PRIOR TO EMBEDMENT FABRICATION, THE CONSTRUCTION CONTRACTOR SHALL SUBMIT SHOP DRAWINGS OF ALL EMBEDMENTS NOT DETAILED ON J3 SERIES DRAWINGS.
9. THE CONCRETE EMBEDMENTS ARE SUBJECT TO THE OFF-SITE FABRICATION REQUIREMENTS SET FORTH IN SECTION 15065. ON-SITE WELDING IS SUBJECT TO THE REQUIREMENTS SET FORTH IN SECTION 18100A. ON-SITE CONSTRUCTION IS SUBJECT TO THE REQUIREMENTS SET FORTH IN SECTION 05121.
10. THE EMBEDDED WELDMENTS WILL ULTIMATELY BECOME PART OF A SEALED HOT CELL LINER. THE LINER SHALL BE SEALED AND CONTINUOUS WITHIN THE HOT CELL STRUCTURE.
11. ALL FIELDS WELDS SHALL BE VISUALLY INSPECTED AND FREE FROM DEFECTS IN ACCORDANCE WITH AWS D1.6. ALL FIELD WELDS SHALL BE EXAMINED USING NON-CHLORIDE CONTAINING DYE PENETRANT IN ACCORDANCE WITH ASME SECTION VIII, DIVISION 1, APPENDIX 8.
12. PERSONNEL PERFORMING NON-DESTRUCTIVE EXAMINATION SHALL BE CERTIFIED PER ASNT SNT-TC-1A.
13. EMBED A 18" X 10" CARBON STEEL BLOCK WHERE SHOWN. USE 3/8" DIAMETER BY 4 1/8" LONG NELSON H4L HEADED CONCRETE ANCHORS SPACED ON A 12" GRID.
14. HAND PACK HIGH DENSITY CONCRETE PER SECTION 03300 BENEATH EACH WELDMENT.
15. ANCHOR 14" WIDE EMBEDS USING TWO ROWS OF 3/8" DIAMETER BY 4 1/8" LONG 316L NELSON H4L HEADED CONCRETE ANCHORS SPACED ON 12" CENTERS.

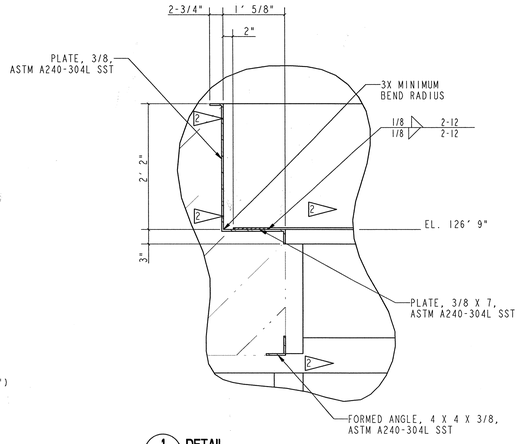

1 DETAIL
SCALE: 1" = 1'

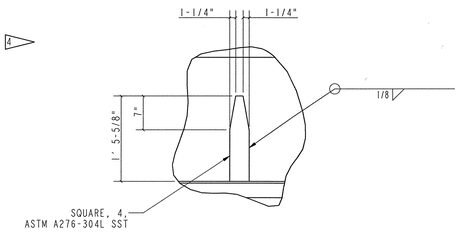

2 DETAIL
SCALE: 1" = 1'

NO REPRESENTATION OR WARRANTY,EXPRESSED OR IMPLIED,IS MADE AS TO THE ACCURACY, COMPLETENESS OR USEFULNESS OF THE INFORMATION OR STATEMENTS CONTAINED IN THESE DRAWINGS, OR THAT THE USE OR DISCLOSURE OF ANY INFORMATION, APPARATUS, METHOD OR PROCESS DISCLOSED IN THESE DRAWINGS MAY NOT INFRINGE PRIVATE RIGHTS OF OTHERS. NO LIABILITY IS ASSUMED WITH RESPECT TO THE USE OF, OR FOR DAMAGES RESULTING FROM THE USE OF, ANY INFORMATION, APPARATUS, METHOD OR PROCESS DISCLOSED IN THESE DRAWINGS. DRAWINGS MADE AVAILABLE FOR INFORMATION TO BIDDER ARE NOT TO BE USED FOR OTHER PURPOSES, AND ARE TO BE RETURNED UPON REQUEST OF THE FORWARDING CONTRACTOR.

P THIS DRAWING PRODUCED ON PRO-ENGINEER

THIS DOCUMENT CONTROLLED BY
CHANGE CONTROL SYSTEM 3
ENGINEERING PROCEDURE SNS-ENG-G001

REV	CHANGE TYPE	CHANGE CONTROL SYSTEM	CHANGE NOTICE NUMBER	DESCRIPTION	DSN	CHK	DEPT	DATE	PE	DATE	PJ	DATE	REQ	DATE	UTB	DATE	RPE	RPE NO	DATE	ST	CV	EC	EE	EM	IE	M	PD	SE	AR
0				CERTIFIED FOR CONSTRUCTION - 10/26/01	NHL	MJK											MJK	107067	10-26-01							TBD			

REVISION OR ISSUE PURPOSE — REVISION APPROVALS — SQUAD CHECK

RPE
MATTHEW JAMES KUDISIN
REGISTERED PROFESSIONAL ENGINEER
AGRICULTURE
No. 107067
STATE OF TENNESSEE
REV. 0 DATE 10-26-01

DRAWING APPROVALS

DSN	N. Fuson	10-23-01
DRW	N. Fuson	10-23-01
CHK	M. J. Kudisin	10-26-01
DEPT		
PE	E. L. Hansen	11/14/01
PJ	R. A. Dean	11/13/01
REQ		
UTB	N. Fuson	11/13/01

108030700-J8E-8700-A097

Knight/Jacobs Joint Venture
701 Scarboro Road, MS 8253
Oak Ridge, TN 37830
865-241-9433
fax 865-241-3400

MERRICK Engineers & Architects

UT-BATTELLE
Oak Ridge National Laboratory, managed by UT-Battelle, LLC, for the U.S. Dept. of Energy under contract DE-AC05-00OR22725

PROJECT NAME:
SPALLATION NEUTRON SOURCE

TARGET BUILDING
EMBEDMENT LOCATION ELEVATIONS
INSTRUMENT LEVEL, SECTOR 45

I	48	49	50	PLANT	BLDG	FL	SH.	OF	TYPE	CLASS
3	J	X	X	8	8700		1	1	S	U
51		52		53	WBS					REV
NC		NA		IN	1.8.3.7	J9.20.30				0

J9-20-30