NEXT ASS'Y: | FINAL ASS'Y:

NOTES:

1. PLACE THE COOLER ASSEMBLY ON THE BRACKET USING THE EMBED PINS. NO WELDING OR BOLTING IS REQUIRED.
2. ALL OF THE HORIZONTAL SUPPORT STEEL IS A AISI W8X18 MANUFACTURED USING ASTM A36 MATERIAL. INSTALL THE TWO BRACKET TYPES SHOWN USING 1/2 HILTI HAS-E THREADED ROD ANCHORS. EMBED THE RODS 4 INCHES USING HILTI HIT HY 150 ADHESIVE.
3. FIELD WELD THE HORIZONTAL SUPPORT STEEL TO THE BRACKETS AS SHOWN AT EACH BRACKET LOCATION.
4. DENOTES SHAFT CENTERLINE.
5. INSTALL THE SHIELD BLOCK SHOWN IN DETAIL 3 USING A FULL LENGTH 6 X 6 X 1/2 ASTM A36 ANGLE AND A 12 X 1 X 48 ASTM A36 PLATE. FASTEN THE ANGLE AND PLATE USING 1/2" HILTI HAS-E THREADED ROD ANCHORS SPACED ON 6" CENTERS. EMBED ANCHORS A MINIMUM OF 3 INCHES USING HILTI HIT HY 150 ADHESIVE. DO NOT COVER THE CUT-OUT IN THE SHIELD BLOCK.
6. INSTALL (4) UNDERCUT ANCHORS PER ANGLE WALL BRACKET. USE HILTI HDA P22M12 ANCHORS WITH A MINIMUM EMBEDMENT OF 5".

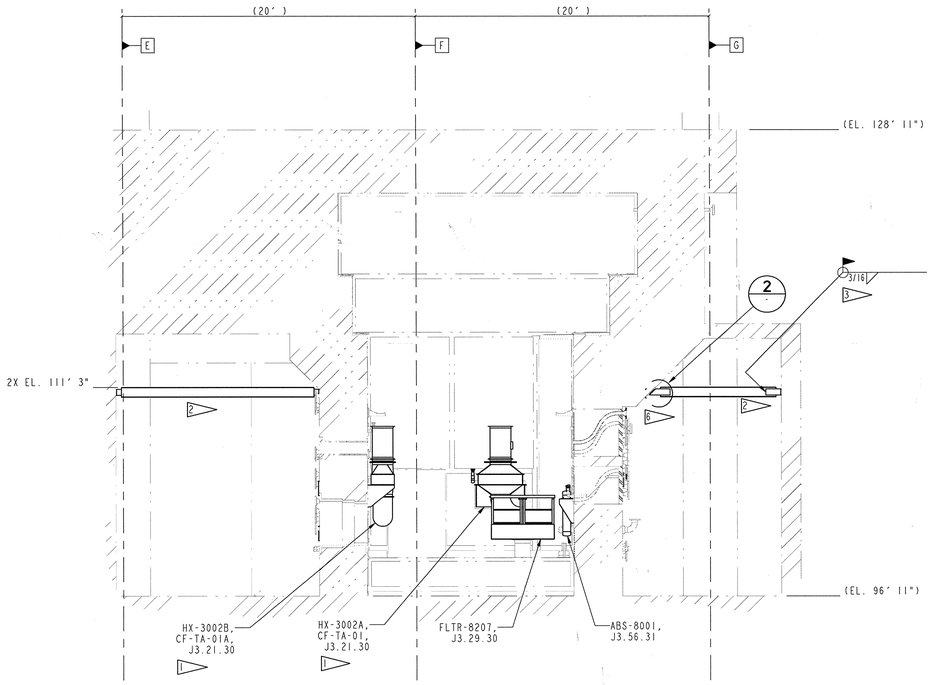

E SECTION
J7.01.45 SCALE: 1/4" = 1'

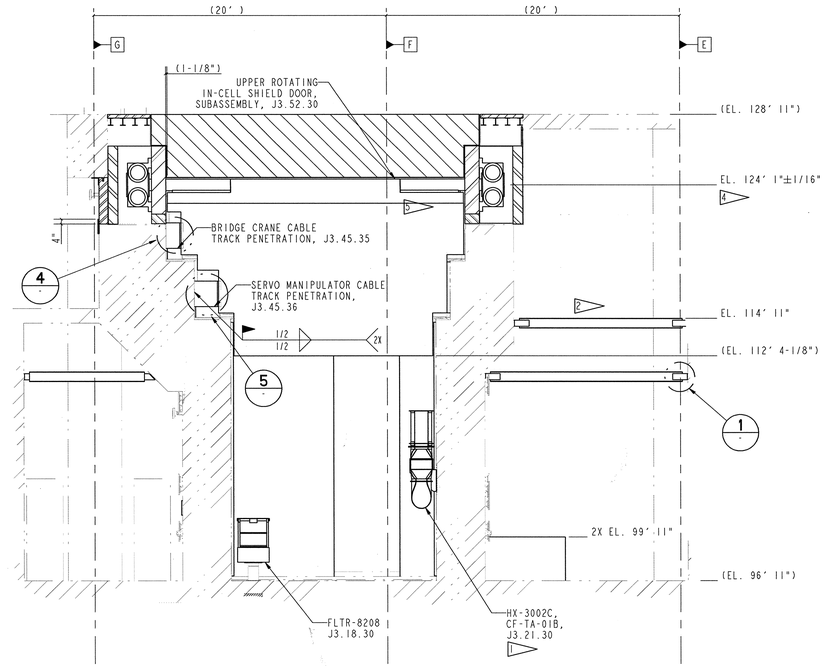

F SECTION
J7.01.45 SCALE: 1/4" = 1'

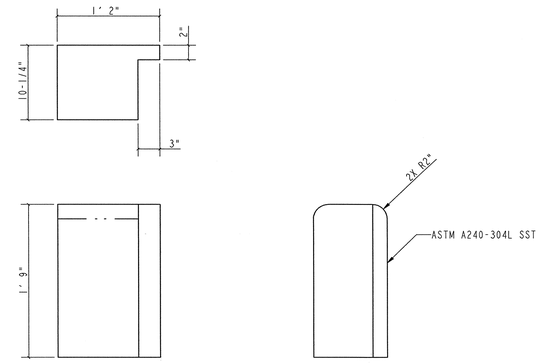

4 CABLE TRACK SHIELDING
SCALE: 1/8

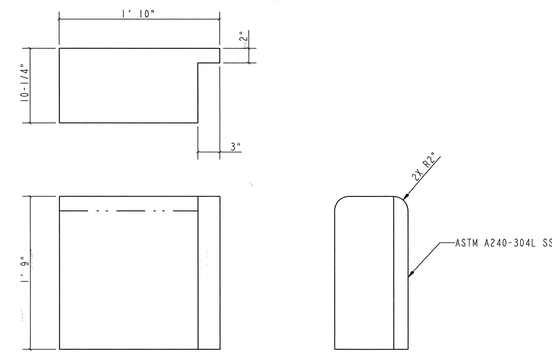

5 CABLE TRACK SHIELDING
SCALE: 1/8

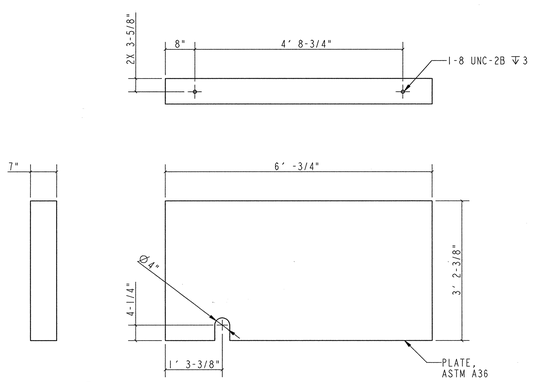

3 SHIELD BLOCK
SCALE: 1/16

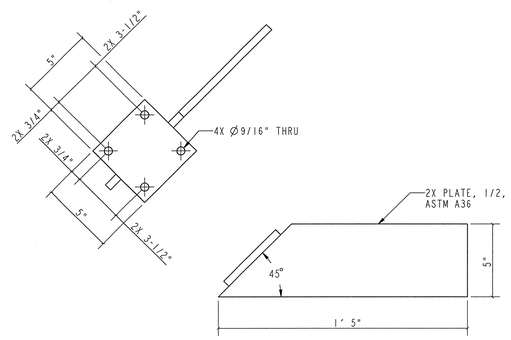

2 ANGLED WALL BRACKET
SCALE: 1/4

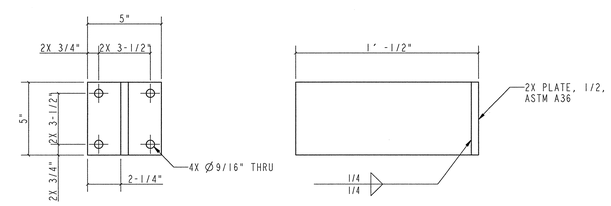

1 WALL BRACKET
SCALE: 1/4

NO REPRESENTATION OR WARRANTY, EXPRESSED OR IMPLIED, IS MADE AS TO THE ACCURACY, COMPLETENESS OR USEFULNESS OF THE INFORMATION OR STATEMENTS CONTAINED IN THESE DRAWINGS, OR THAT THE USE OR DISCLOSURE OF ANY INFORMATION, APPARATUS, METHOD OR PROCESS DISCLOSED IN THESE DRAWINGS MAY NOT INFRINGE PRIVATE RIGHTS OF OTHERS. NO LIABILITY IS ASSUMED WITH RESPECT TO THE USE OF, OR FOR DAMAGES RESULTING FROM THE USE OF, ANY INFORMATION, APPARATUS, METHOD OR PROCESS DISCLOSED IN THESE DRAWINGS. DRAWINGS MADE AVAILABLE FOR INFORMATION TO BIDDER ARE NOT TO BE USED FOR OTHER PURPOSES, AND ARE TO BE RETURNED UPON REQUEST OF THE FORWARDING CONTRACTOR.

P THIS DRAWING PRODUCED ON PRO-ENGINEER

THIS DOCUMENT CONTROLLED BY
CHANGE CONTROL SYSTEM 3
ENGINEERING PROCEDURE SNS-ENG-G001

REV	CHANGE TYPE	CHANGE STATUS	CHANGE REQUEST	DESCRIPTION	DSN	CHK	DEPT	DATE	PE	DATE	PJ	DATE	REQ	DATE	UTB	DATE	RPE	RPE NO	DATE	ST	CV	EC	EE	EM	IE	M	PD	SE	AR
0				CERTIFIED FOR CONSTRUCTION - 10/26/01	NHL	MJK				11/14/01		11/2/01				11/2/01	MJK	107067	10/26/01							TRO			

REVISION OR ISSUE PURPOSE | REVISION APPROVALS | SQUAD CHECK

RPE
MATTHEW JAMES KNUDSEN, REGISTERED ENGINEER, CERTIFICATE NO. 107067, STATE OF TENNESSEE

DSN	M. Knudsen	10-23-01
DRW	M. Knudsen	10-23-01
CHK	MJK	10-23-01
DEPT		
PE	MJ Warren	11/14/01
PJ	RA Dean	11/2/01
REQ		
UTB	JL Faulkner	11/2/01

REV. 0 DATE 10-23-01
DRAWING APPROVALS

108030700-J8E-8700-A080

Knight/Jacobs Joint Venture
701 Scarboro Road, MS 8253
Oak Ridge, TN 37830
865-241-9433
fax 865-241-3400

MERRICK Engineers & Architects

UT-BATTELLE
Oak Ridge National Laboratory, managed by UT-Battelle, LLC, for the U.S. Dept. of Energy under contract DE-AC05-00OR22725

PROJECT NAME:
SPALLATION NEUTRON SOURCE
TARGET BUILDING
MECH. EQUIPMENT INSTALLATION
INSTR. LEV. SECTIONS, SECTOR 45

1	48	49	50	PLANT	BLDG	FL	SH.	OF	TYPE	CLASS
3	J	X	X	8	8700		1	1	S	U

51	52	53	WBS		REV
NC	NA	IN	1.8.3.7	J7.10.30	0

J7-10-30