	A
J5-20-37_1	2'
J5-20-37_2	2' 6"
J5-20-37_3	3'
J5-20-37_4	3' 6"

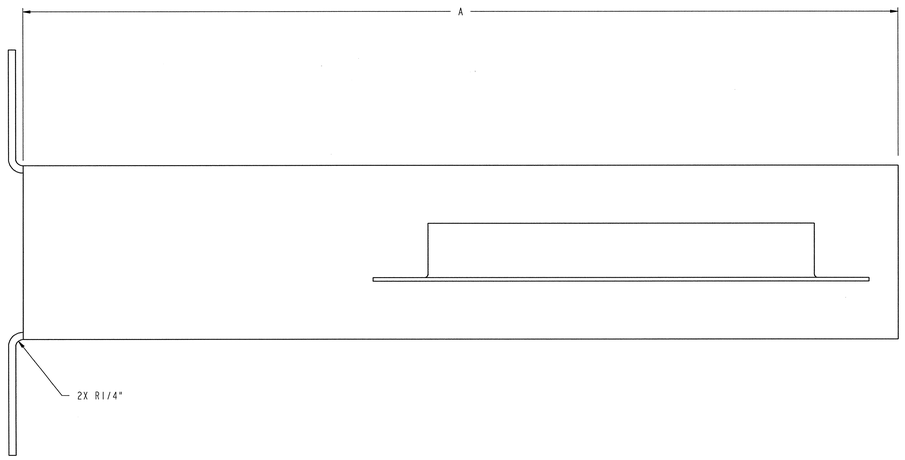

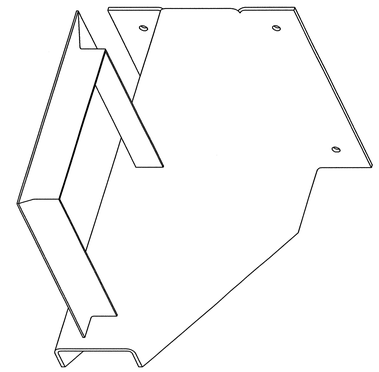

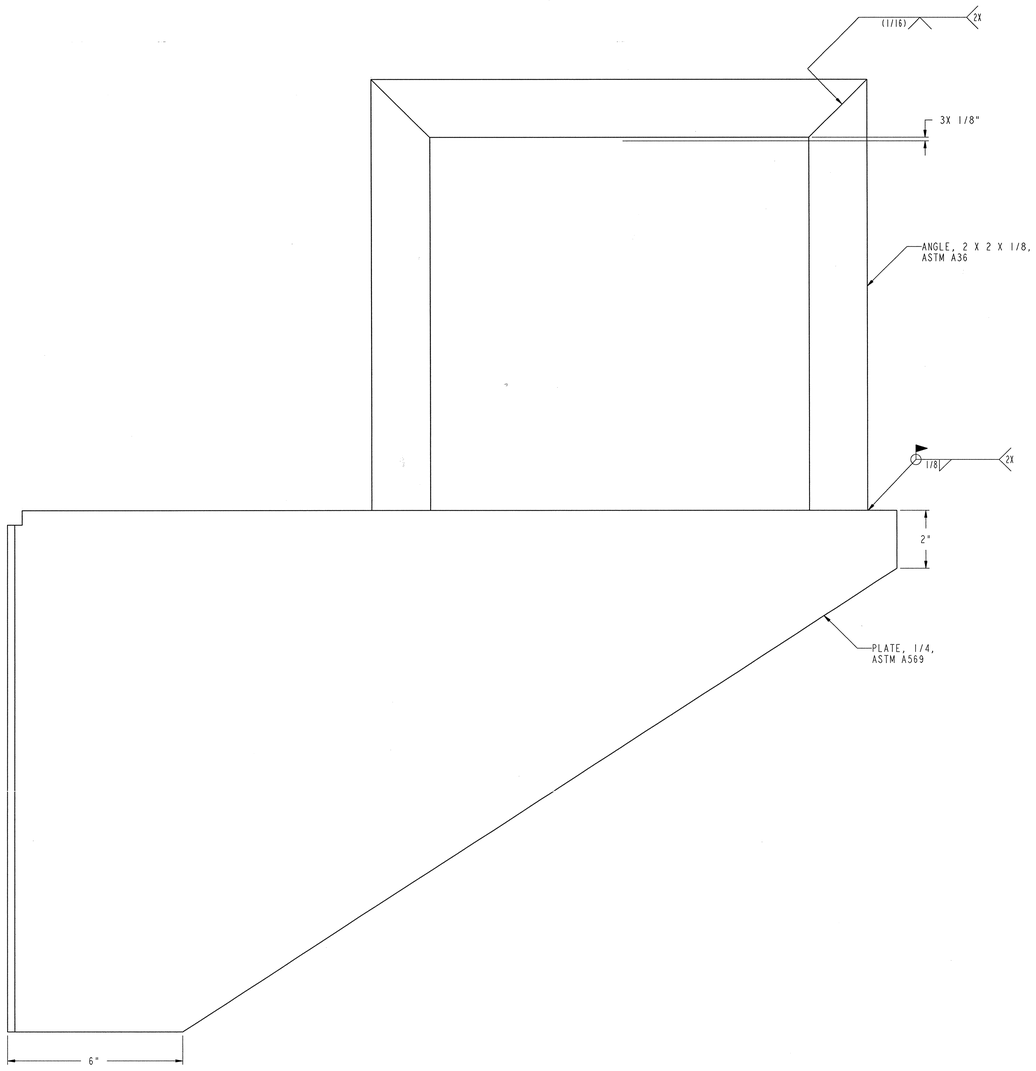

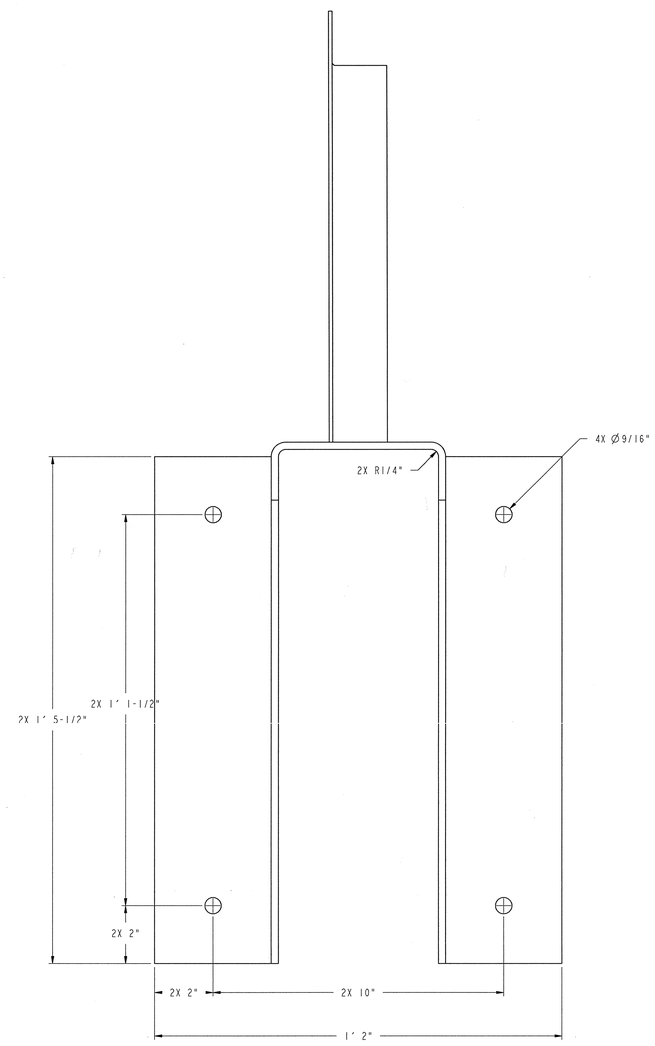

NOTES:

1. FOR USE WITH 1/2 INCH DIAMETER HILTI HAS-E THREADED RODS. EMBED RODS A MINIMUM OF 4 INCHES USING HIT HY 150 ADHESIVE.
2. PRIME BRACKET IN ACCORDANCE WITH SECTION 09900.
3. WELDING SHALL BE IN ACCORDANCE WITH SECTION 18100A.

SCALE: 1/2

J5-20-37

108030700-J8E-8700-A237

Knight/Jacobs Joint Venture
701 Scarboro Road, MS 8253
Oak Ridge, TN 37830
865-241-9433
fax865-241-3400

MERRICK Engineers & Architects

UT-BATTELLE
Oak Ridge National Laboratory, managed by UT-Battelle, LLC, for the U.S. Dept. of Energy under contract DE-AC05-00OR22725

PROJECT NAME:
SPALLATION NEUTRON SOURCE

TARGET BUILDING
PIPE SUPPORT BRACKET
WELDMENT

1	48	49	50	PLANT	BLDG	FL	SH.	OF	TYPE	CLASS
3	J	X	X	8	8700		1	1.	G	U

51	52	53	WBS		REV
NC	NA	IN	1.8.3.7	J5.20.37	0

REV	CHANGE TYPE	CHANGE SYSTEM	CHANGE NUMBER	DESCRIPTION	DSN	CHK	DEPT	DATE	PE	DATE	PJ	DATE	REQ	DATE	UTB	DATE	RPE	RPE NO	DATE	ST	CV	EC	EE	EM	IE	M	PD	SE	AR
0				CERTIFIED FOR CONSTRUCTION - 10/26/01	NHL	MJK			CJD	11/14/01	RAD	11/12/01			JMT	11/13/01	MJK	107067	10/26/01		PSK					780			

REVISION OR ISSUE PURPOSE — REVISION APPROVALS — SQUAD CHECK

RPE

MATTHEW JAMES KNUDSEN, REGISTERED ENGINEER, AGRICULTURE, COMMERCE, NO. 107067, STATE OF TENNESSEE

DSN	M. Knudsen	
DRW	M. Knudsen	10-24-01
CHK	[illegible]	10-24-01
DEPT		
PE	P J Danson	11/14/01
PJ	RA Dean	11/12/01
REQ		
UTB	M Fanson	11/13/01

REV. 0 DATE 10-24-01 — DRAWING APPROVALS

NO REPRESENTATION OR WARRANTY, EXPRESSED OR IMPLIED, IS MADE AS TO THE ACCURACY, COMPLETENESS OR USEFULNESS OF THE INFORMATION OR STATEMENTS CONTAINED IN THESE DRAWINGS, OR THAT THE USE OR DISCLOSURE OF ANY INFORMATION, APPARATUS, METHOD OR PROCESS DISCLOSED IN THESE DRAWINGS MAY NOT INFRINGE PRIVATE RIGHTS OF OTHERS. NO LIABILITY IS ASSUMED WITH RESPECT TO THE USE OF, OR FOR DAMAGES RESULTING FROM THE USE OF, ANY INFORMATION, APPARATUS, METHOD OR PROCESS DISCLOSED IN THESE DRAWINGS. DRAWINGS MADE AVAILABLE FOR INFORMATION TO BIDDER ARE NOT TO BE USED FOR OTHER PURPOSES, AND ARE TO BE RETURNED UPON REQUEST OF THE FORWARDING CONTRACTOR.

P THIS DRAWING PRODUCED ON PRO-ENGINEER

THIS DOCUMENT CONTROLLED BY CHANGE CONTROL SYSTEM 3
ENGINEERING PROCEDURE SNS-ENG-G001