NEXT ASS'Y: FINAL ASS'Y:

NOTES:

1. INSTALL TRAPEZE HANGERS USING UNISTRUT P1000 BEAM, HTHR037 THREADED ROD, AND P2682 BEAM CLAMP (CEILING MOUNTED), AND P2558 SERIES PIPE CLAMPS. ANCHOR BEAM CLAMP USING HILTI HDA-P20 M10 UNDERCUT ANCHORS. FASTEN THE THREADED ROD TO THE TRAPEZE HANGER AND BEAM CLAMP USING A 3/8 NUT AND WASHER ON TOP AND BOTTOM OF EACH DEVICE. INSTALL TRAPEZE HANGERS EVERY 6 FEET.
2. FABRICATE AND INSTALL A SHEET METAL TEE INSERT THAT MAINTAINS THE DUCT CROSS SECTION. USE SEAL WELDED SHEET, 11 GA., ASTM A240-304L SST.

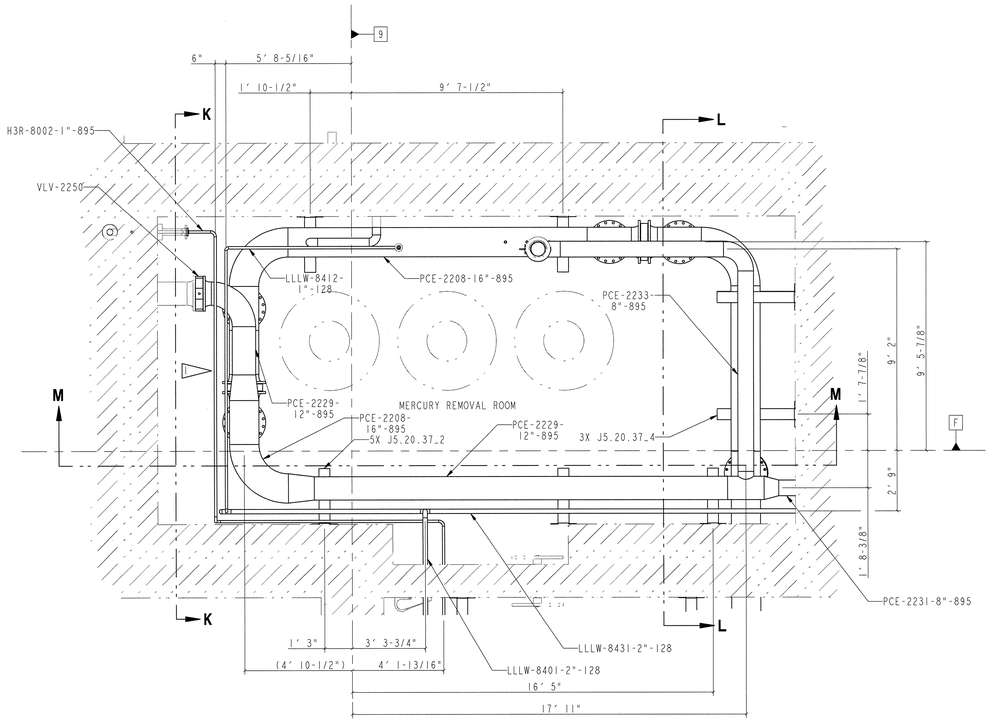

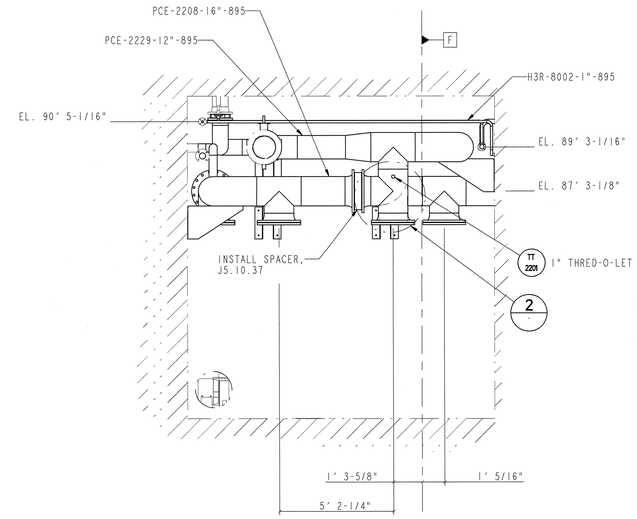

K SECTION (J5.10.37) SCALE: 3/8" = 1'

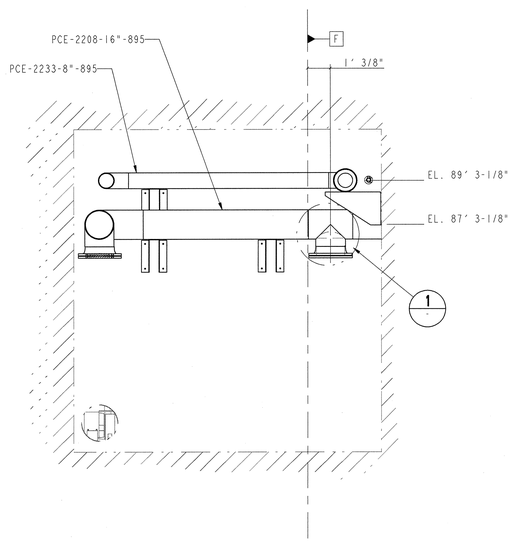

L SECTION (J5.10.37) SCALE: 3/8" = 1'

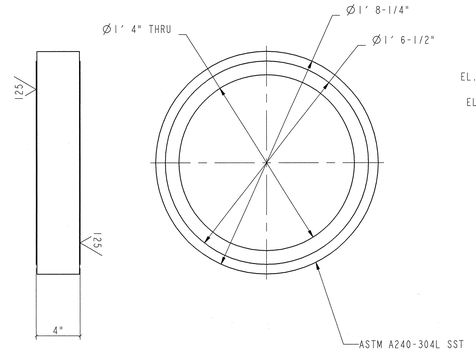

- SPACER DETAIL (J5.10.37) SCALE: 3/8

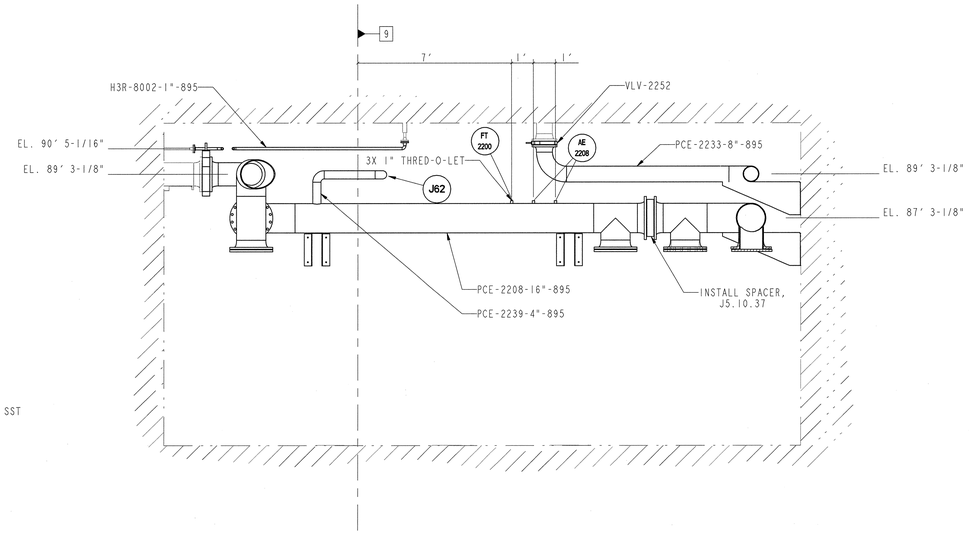

M SECTION (J5.10.37) SCALE: 3/8" = 1'

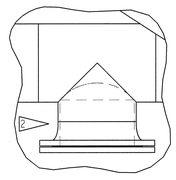

1 TEE INSERT DETAIL SCALE: 1" = 1'

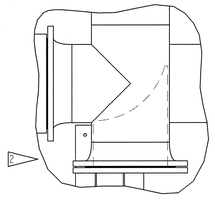

2 TEE INSERT DETAIL SCALE: 1" = 1'

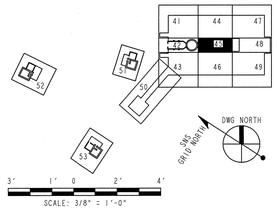

NO REPRESENTATION OR WARRANTY,EXPRESSED OR IMPLIED,IS MADE AS TO THE ACCURACY, COMPLETENESS OR USEFULNESS OF THE INFORMATION OR STATEMENTS CONTAINED IN THESE DRAWINGS, OR THAT THE USE OR DISCLOSURE OF ANY INFORMATION, APPARATUS, METHOD OR PROCESS DISCLOSED IN THESE DRAWINGS MAY NOT INFRINGE PRIVATE RIGHTS OF OTHERS. NO LIABILITY IS ASSUMED WITH RESPECT TO THE USE OF, OR FOR DAMAGES RESULTING FROM THE USE OF, ANY INFORMATION, APPARATUS, METHOD OR PROCESS DISCLOSED IN THESE DRAWINGS. DRAWINGS MADE AVAILABLE FOR INFORMATION TO BIDDER ARE NOT TO BE USED FOR OTHER PURPOSES, AND ARE TO BE RETURNED UPON REQUEST OF THE FORWARDING CONTRACTOR.

P THIS DRAWING PRODUCED ON PRO-ENGINEER

THIS DOCUMENT CONTROLLED BY
CHANGE CONTROL SYSTEM 3
ENGINEERING PROCEDURE SNS-ENG-G001

REV	CHANGE TYPE	CONTROL SYSTEM	CHANGE NUMBER	DESCRIPTION (REVISION OR ISSUE PURPOSE)	DSN	CHK	DEPT	DATE	PE	DATE	PJ	DATE	REQ	DATE	UTB	DATE	RPE	RPE NO	DATE	ST	CV	EC	EE	EM	IE	M	PD	SE	AR
0				CERTIFIED FOR CONSTRUCTION - 10/26/01	NHL	MJK			RDD	11/5/01	RDD	11/14/01					MJK	107067	11/13/01	MJK						TBD			

REVISION APPROVALS — SQUAD CHECK

RPE — MATTHEW JAMES KNOBBE, REGISTERED PROFESSIONAL ENGINEER, STATE OF TENNESSEE

DRAWING APPROVALS		
DSN	M. Bruce	11-12-01
DRW	M. Bruce	11-12-01
CHK	MJK	11-12-01
DEPT		
PE	R.D. Morrison	11/15/01
PJ	RA Dean	11/14/01
REQ		
REV. 0 DATE 11-12-01	UTB	11/14/01

Knight/Jacobs Joint Venture
701 Scarboro Road, MS 8253
Oak Ridge, TN 37830
865-241-9433
fax 865-241-3400

MERRICK Engineers & Architects

UT-BATTELLE — Oak Ridge National Laboratory, managed by UT-Battelle, LLC, for the U.S. Dept. of Energy under contract DE-AC05-00OR22725

PROJECT NAME: SPALLATION NEUTRON SOURCE

TARGET BUILDING
GOLD AMALGAMATION
PARTIAL PLAN AND SECTION

1	48	49	50	PLANT	BLDG	FL	SH.	OF	TYPE	CLASS
3	J	X	X	8	8700		1	1	P	U

51	52	53	WBS		REV
NC	NA	IN	1.8.3.7	J5.10.37	0

108030700-J8E-8700-A231

J5-10-37