GENERAL NOTES:
1) DIMENSIONS AND SYMBOLOGY ARE AMERICAN NATIONAL STANDARD UNLESS OTHERWISE SPECIFIED.
2) ROUGHNESS AVERAGE EQUALS 125 MICROINCHES UNLESS OTHERWISE SPECIFIED.
3) DIMENSIONS AND TOLERANCES ARE IN INCHES.
4) BREAK ALL SHARP EDGES.
5) TOLERANCES:
DECIMALS: .X = ±.060
.XX = ±.030
.XXX = ±.010
FRACTIONS: ±1/16
ANGULAR: ±1°

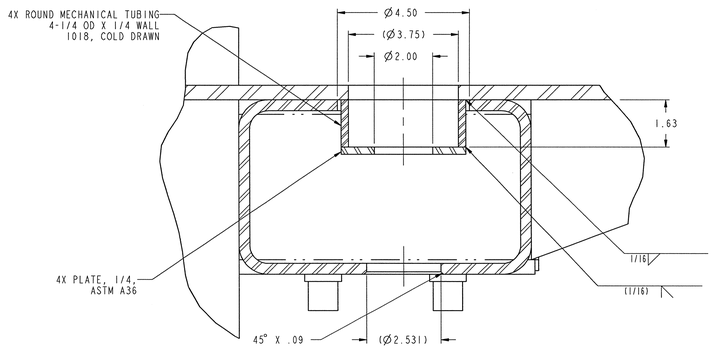

SECTION B-B
SCALE 1/2

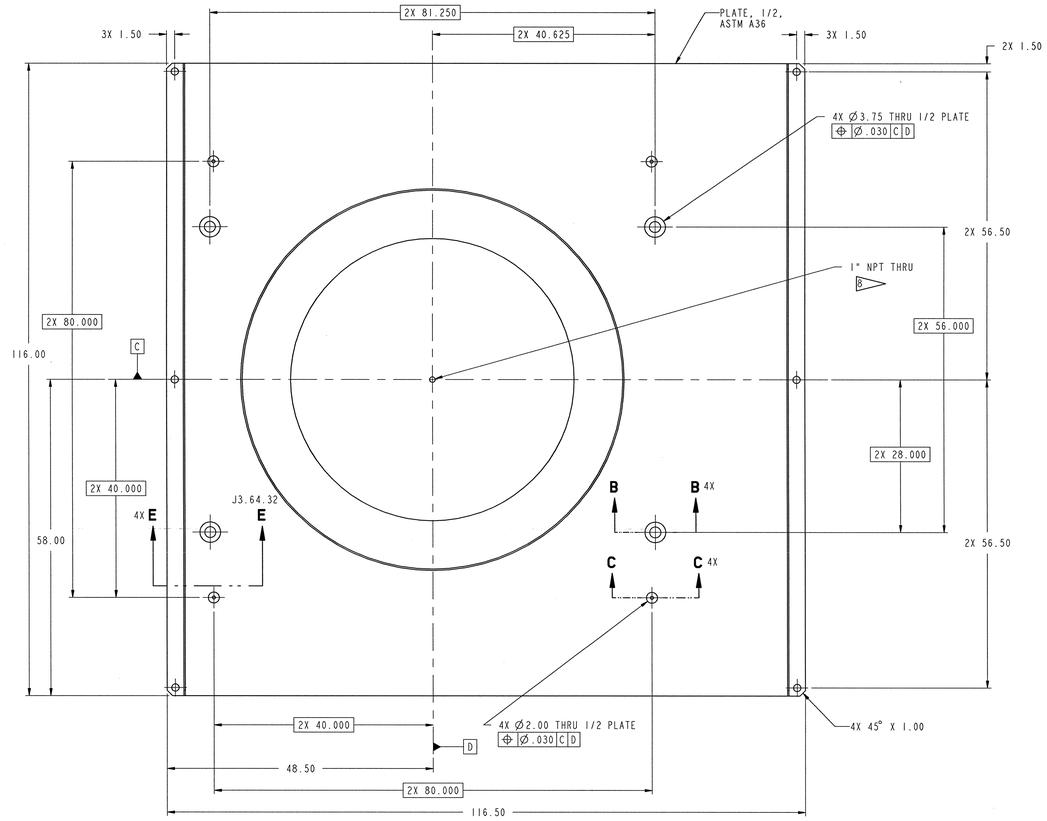

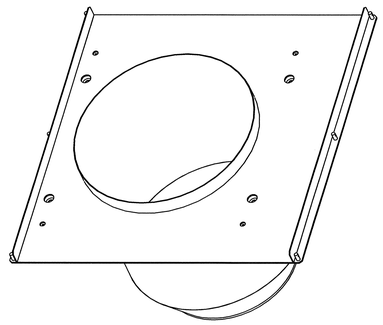

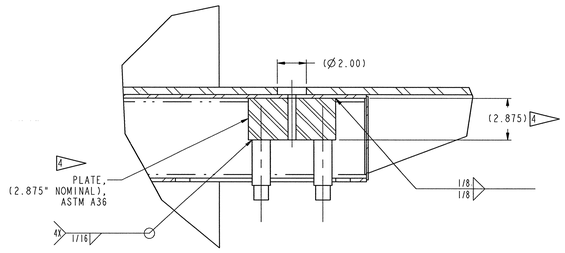

SECTION C-C
SCALE 1/4

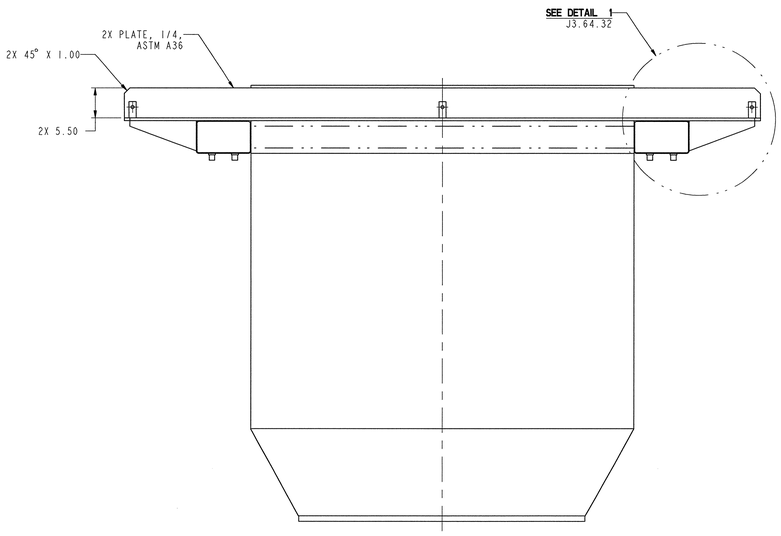

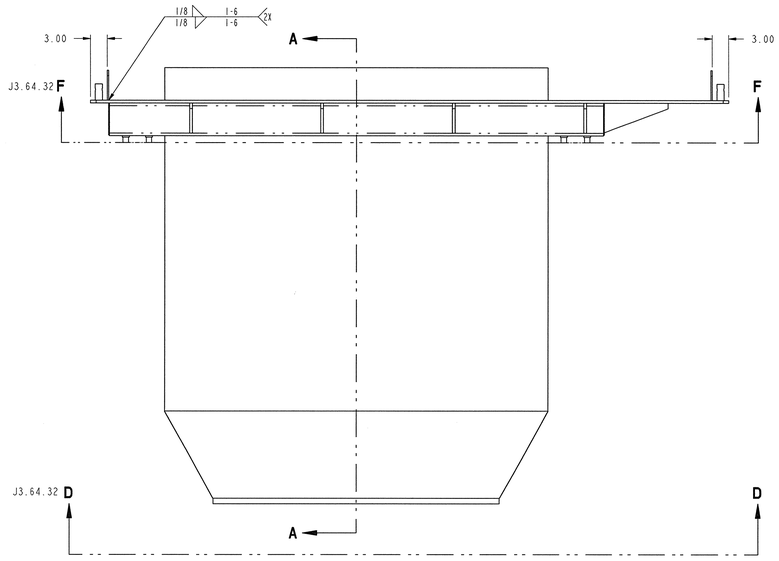

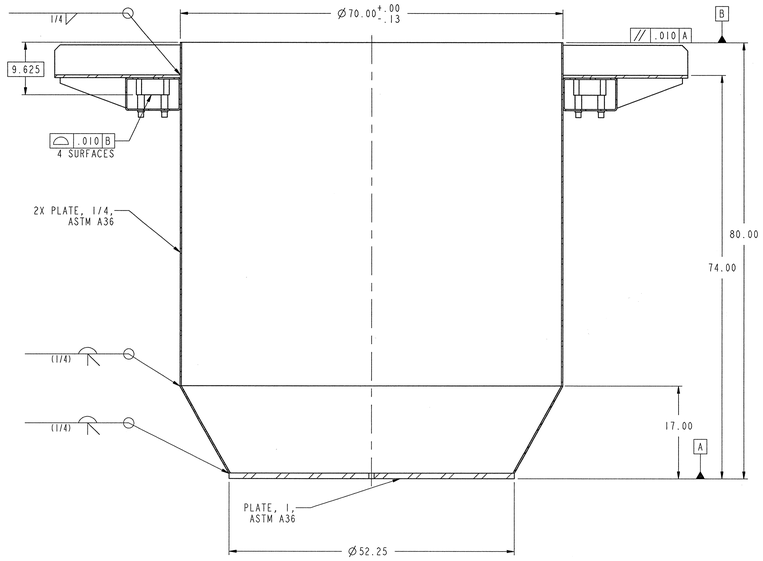

SECTION A-A

SCALE: 3/32

NOTES:

1. SEE DRAWING J3.64.32 FOR ADDITIONAL CASK SUPPORT FRAME WELDMENT DETAILS.
2. THE NOTES BELOW APPLY TO DRAWING J3.64.32 AS WELL.
3. THIS COMPONENT IS SUBJECT TO THE REQUIREMENTS SET FORTH IN SECTION 15065.
4. INDICATED PLATES MUST BE THICKER THAN NOMINAL DIMENSION PRIOR TO MACHINING. IT IS LEFT UP TO THE FABRICATORS DISCRETION TO DETERMINE THE ADDITIONAL PLATE THICKNESS IN ORDER TO MEET SPECIFIED DIMENSIONS AND TOLERANCES.
5. THIS COMPONENT SHALL BE PRIMED AND PAINTED IN ACCORDANCE WITH SECTION 09960.
6. MASK HOLES AND HOLES WITH THREADS.
7. DO NOT PAINT THESE SURFACES.
8. TAP 1" NPT HOLE IN BOTTOM PLATE FROM OUTSIDE.
9. COMPONENT WEIGHT: 4251 LBS.

NO REPRESENTATION OR WARRANTY, EXPRESSED OR IMPLIED, IS MADE AS TO THE ACCURACY, COMPLETENESS OR USEFULNESS OF THE INFORMATION OR STATEMENTS CONTAINED IN THESE DRAWINGS, OR THAT THE USE OR DISCLOSURE OF ANY INFORMATION, APPARATUS, METHOD OR PROCESS DISCLOSED IN THESE DRAWINGS MAY NOT INFRINGE PRIVATE RIGHTS OF OTHERS. NO LIABILITY IS ASSUMED WITH RESPECT TO THE USE OF, OR FOR DAMAGES RESULTING FROM THE USE OF, ANY INFORMATION, APPARATUS, METHOD OR PROCESS DISCLOSED IN THESE DRAWINGS. DRAWINGS MADE AVAILABLE FOR INFORMATION TO BIDDER ARE NOT TO BE USED FOR OTHER PURPOSES, AND ARE TO BE RETURNED UPON REQUEST OF THE FORWARDING CONTRACTOR.

P THIS DRAWING PRODUCED ON PRO-ENGINEER

THIS DOCUMENT CONTROLLED BY
CHANGE CONTROL SYSTEM 3
ENGINEERING PROCEDURE SNS-ENG-G001

REV	CHANGE DATE	CHANGE SYSTEM	CHANGE NUMBER	DESCRIPTION (REVISION OR ISSUE PURPOSE)	DSN	CHK	DEPT	DATE	PE	DATE	PJ	DATE	REQ	DATE	UTB	DATE	RPE	RPE NO	DATE	ST	CV	EC	EE	EM	IE	M	PD	SE	AR
0				CERTIFIED FOR CONSTRUCTION - 10/26/01	NHL	TBO		8/20	11/14/01	RAD	11/26/01					11/26/01	TBO	106873	10/26/01										

RPE: TODD BUAROT, OWEN — REGISTERED ENGINEER — AGRICULTURE — STATE OF TENNESSEE

REV. 0 DATE 10/26/01

DSN	N. Lewis	10/25/01
DRW		11/5/01
CHK		10/26/01
DEPT		
PE		11/14/01
PJ		11/26/01
REQ		
UTB		11/26/01

DRAWING APPROVALS

Knight/Jacobs Joint Venture
701 Scarboro Road, MS 8253
Oak Ridge, TN 37830
865-241-9433
fax 865-241-3400

MERRICK Engineers & Architects

UT-BATTELLE — Oak Ridge National Laboratory, managed by UT-Battelle, LLC, for the U.S. Dept. of Energy under contract DE-AC05-00OR22725

PROJECT NAME:
SPALLATION NEUTRON SOURCE
TARGET BUILDING
CASK CART
CASK SUPPORT FRAME WELDMENT

1	48	49	50	PLANT	BLDG	FL	SH.	OF	TYPE	CLASS
3	J	X	X	8	8700	.	1	1	G	U

51	52	53	WBS		REV
NC	NA	IN	1.8.3.7	J3.64.31	0

108030700-J8E-8700-A214

J3-64-31