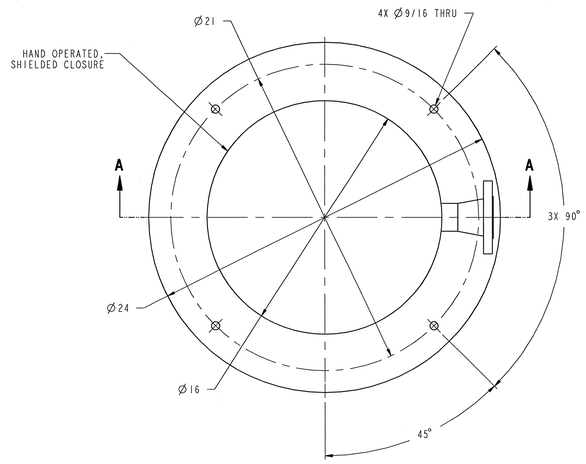

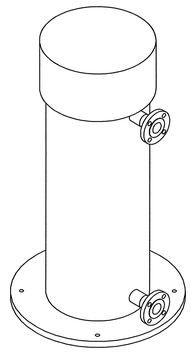

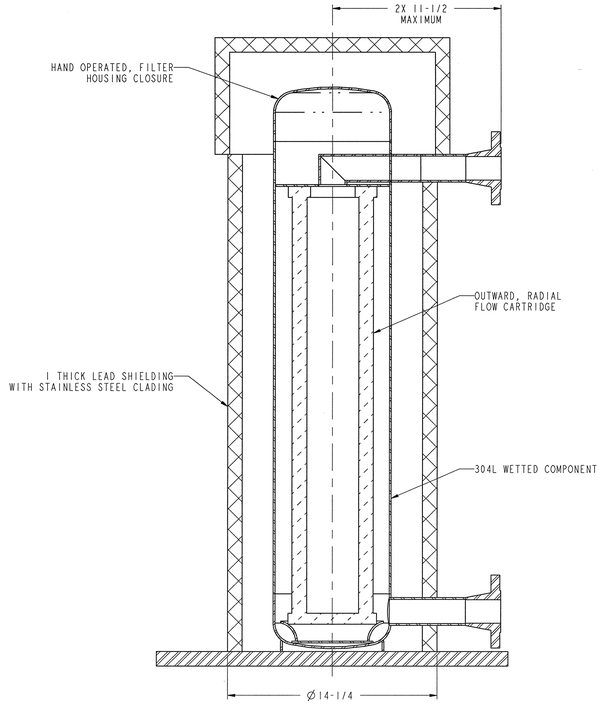

SECTION A-A

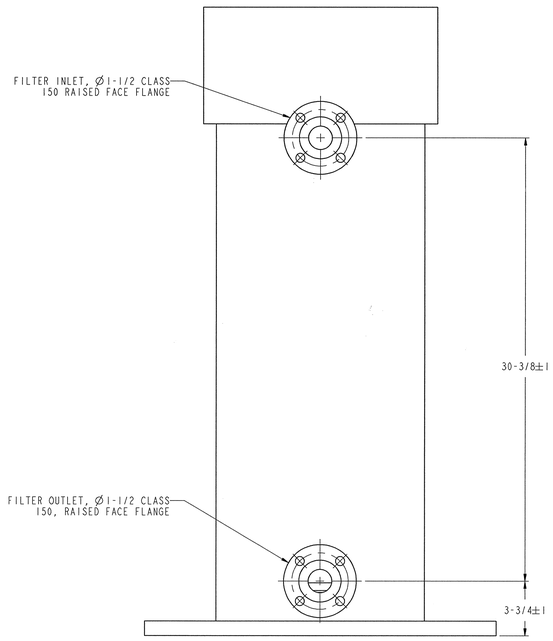

NOTES:

1. THIS COMPONENT IS SUBJECT TO THE REQUIREMENTS SET FORTH IS SECTION 15473.
2. LLLW SYSTEM DESIGN IS BASED ON THE MODEL RWFS-1 RADWASTE FILTER AND SHIELD BY TRI NUCLEAR CORP.

SCALE: 1/4

J3-63-32

108030700-J8E-8700-A213

Knight/Jacobs Joint Venture
701 Scarboro Road, MS 8253
Oak Ridge, TN 37830
865-241-9433
fax865-241-3400

MERRICK Engineers & Architects

UT-BATTELLE — Oak Ridge National Laboratory, managed by UT-Battelle, LLC, for the U.S. Dept. of Energy under contract DE-AC05-00OR22725

PROJECT NAME:
SPALLATION NEUTRON SOURCE

TARGET BUILDING
FLTR-8404 AND FLTR-8407
COMPONENT DRAWING

1	48	49	50	PLANT	BLDG	FL	SH.	OF	TYPE	CLASS
3	J	X	X	8	8700		1	1	G	U

51	52	53	WBS		REV
NC	NA	IN	1.8.3.7	J3.63.32	0

REV	CHANGE TYPE	CHANGE SYSTEM	CHANGE NUMBER	DESCRIPTION	DSN	CHK	DEPT	DATE	PE	DATE	PJ	DATE	REQ	DATE	UTB	DATE	RPE	RPE NO	DATE		ST	CV	EC	EE	EM	IE	M	PD	SE	AR
0				CERTIFIED FOR CONSTRUCTION - 10/26/01	PCD	MJK			PJD	11/14/01	RAD	11/12/01			JMT	11/13/01	MJK	107067	10/26/01											

REVISION OR ISSUE PURPOSE — REVISION APPROVALS — SQUAD CHECK

RPE

MATTHEW JAMES KNUDSEN — REGISTERED ENGINEER — AGRICULTURE — COMMERCE — NO. 107067 — STATE OF TENNESSEE

DSN	P. D. F.	10/23/01
DRW	P. D. F.	10/23/01
CHK	MJK	10-23-01
DEPT		
PE	P.J. Gannon	11/14/01
PJ	R.A. Dean	11/12/01
REQ		
UTB	JM Fawkin	11/13/01

REV. 0 DATE 10-23-01 — DRAWING APPROVALS

NO REPRESENTATION OR WARRANTY, EXPRESSED OR IMPLIED, IS MADE AS TO THE ACCURACY, COMPLETENESS OR USEFULNESS OF THE INFORMATION OR STATEMENTS CONTAINED IN THESE DRAWINGS, OR THAT THE USE OR DISCLOSURE OF ANY INFORMATION, APPARATUS, METHOD OR PROCESS DISCLOSED IN THESE DRAWINGS MAY NOT INFRINGE PRIVATE RIGHTS OF OTHERS. NO LIABILITY IS ASSUMED WITH RESPECT TO THE USE OF, OR FOR DAMAGES RESULTING FROM THE USE OF, ANY INFORMATION, APPARATUS, METHOD OR PROCESS DISCLOSED IN THESE DRAWINGS. DRAWINGS MADE AVAILABLE FOR INFORMATION TO BIDDER ARE NOT TO BE USED FOR OTHER PURPOSES, AND ARE TO BE RETURNED UPON REQUEST OF THE FORWARDING CONTRACTOR.

P THIS DRAWING PRODUCED ON PRO-ENGINEER

THIS DOCUMENT CONTROLLED BY CHANGE CONTROL SYSTEM 3
ENGINEERING PROCEDURE SNS-ENG-G001