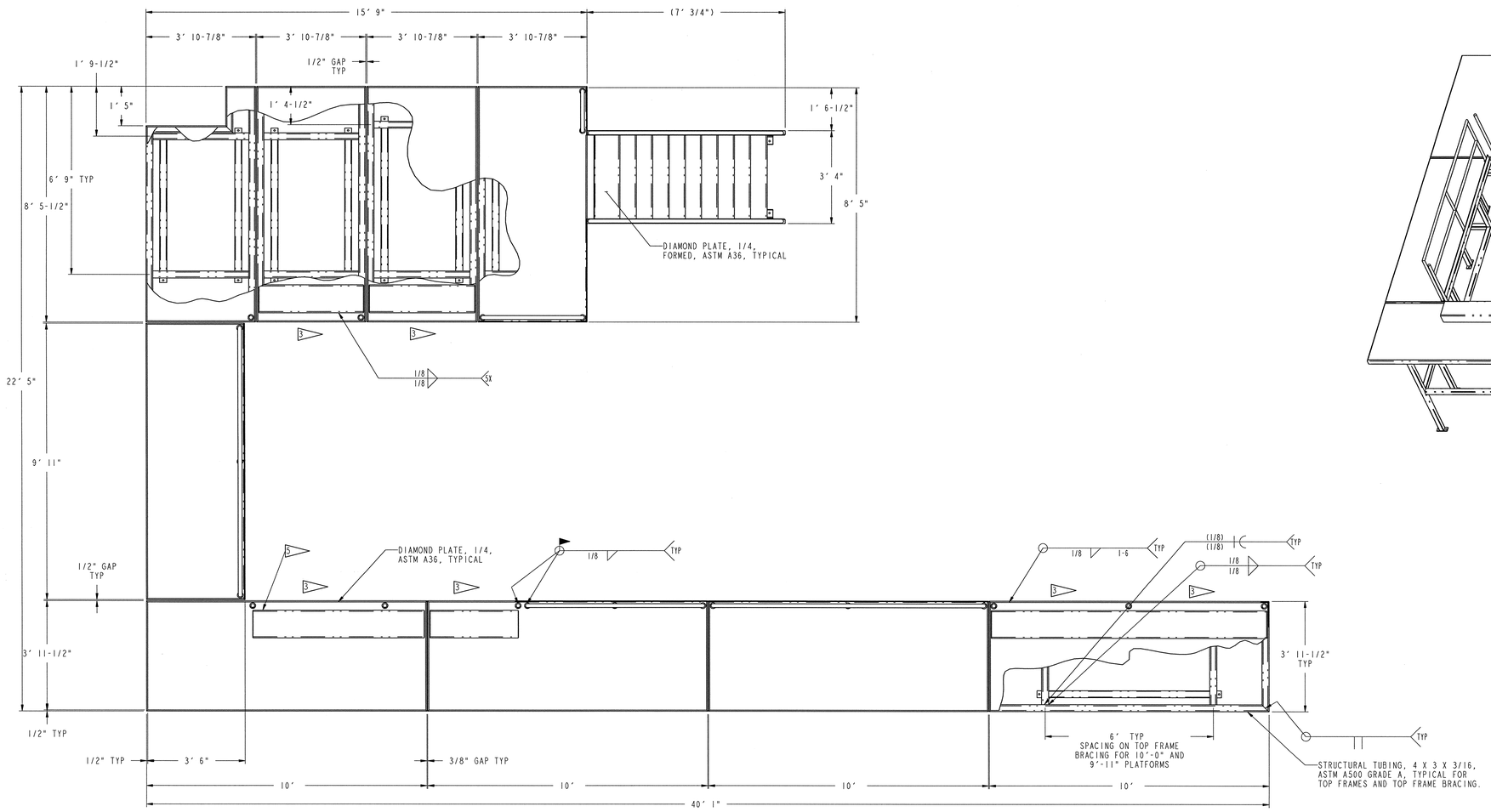

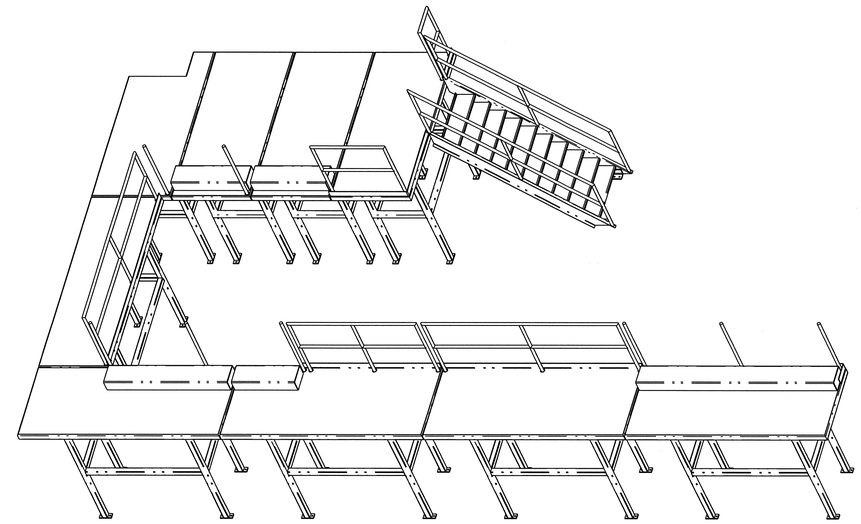

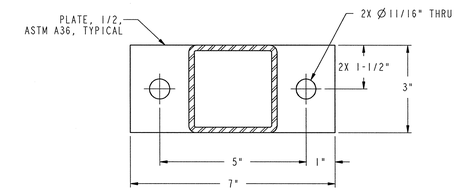

SECTION A-A
SCALE 1/2

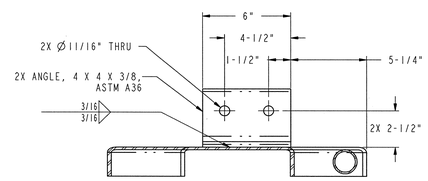

SECTION B-B
SCALE 1/4

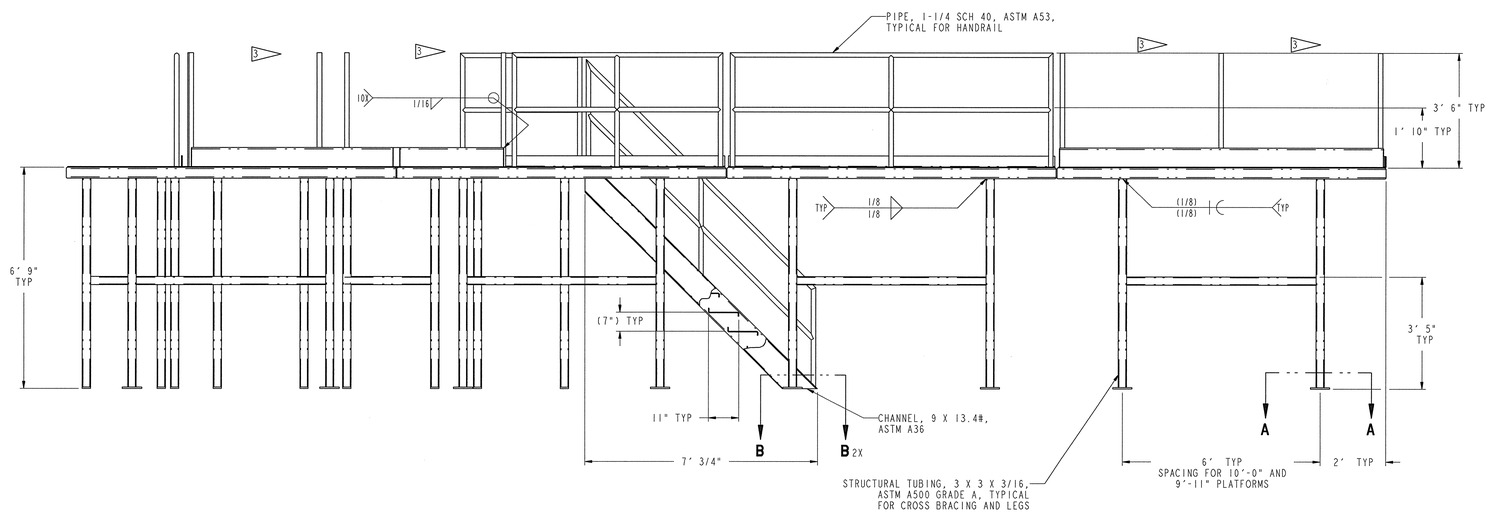

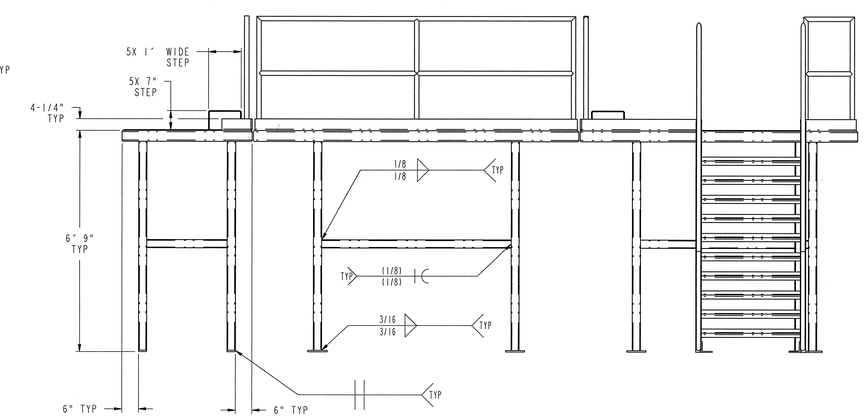

NOTES:

1. THIS COMPONENT IS SUBJECT TO THE REQUIREMENTS SET FORTH IN SECTION 05120
2. THIS COMPONENT SHALL BE PRIMED AND PAINTED IN ACCORDANCE WITH SECTION 15120.

3 PROVIDE PERSONNEL SAFETY CHAIN WHERE INDICATED.

4. THE PLATFORM IS DESIGNED FOR 100 POUNDS PER SQUARE FOOT LIVE LOAD.

5 FABRICATE 5 STEPS AS INDICATED USING 1/4 THICK A36 DIAMOND PLATE, CAP STEPS ON EACH END USING 11 GA. THICK A569 SHEET.

SCALE: 3/64

108030700-J8E-8700-A211

Knight/Jacobs Joint Venture
701 Scarboro Road, MS 8253
Oak Ridge, TN 37830
865-241-9433
Fax 865-241-3400

MERRICK Engineers & Architects

UT-BATTELLE — Oak Ridge National Laboratory, managed by UT-Battelle, LLC, for the U.S. Dept. of Energy under contract DE-AC05-00OR22725

PROJECT NAME:
SPALLATION NEUTRON SOURCE
TARGET BUILDING
BOTTOM LOADING SYSTEM
PLATFORM WELDMENT

1	48	49	50	PLANT	BLDG	FL	SH.	OF	TYPE	CLASS
3	J	X	X	8	8700		1	1	G	U
51		52		53	WBS					REV
NC		NA		IN	1.8.3.7	J3.62.33				0

DSN	N. Lewis	11/23/01
DRW	P. Dell	10/26/01
CHK	T. Dean	10/26/01
DEPT		
PE	L. Harrison	11/29/01
PJ	R. DeLaDean	11/27/01
REQ		
UTB	N. Lewis	11/28/01

RPE — TONIE BUAROT OSBORN, REGISTERED ENGINEER, STATE OF TENNESSEE
REV. 0 DATE 10/27/01
DRAWING APPROVALS

REV	CHANGE TYPE	CHANGE STATUS	CHANGE NUMBER	DESCRIPTION	NHL	TBO			PE	DATE	PJ	DATE	REQ	DATE	UTB	DATE	RPE	RPE NO	DATE		ST	CV	EC	EE	EM	IE	M	PD	SE	AR
0				CERTIFIED FOR CONSTRUCTION - 10/26/01		TBO			PED	10/26/01	RPD	11/26/01				11/28/01	TBO	106873	10/26/01											
REV				DESCRIPTION	DSN	CHK	DEPT	DATE	PE	DATE	PJ	DATE	REQ	DATE	UTB	DATE	RPE	RPE NO	DATE		ST	CV	EC	EE	EM	IE	M	PD	SE	AR
REVISION OR ISSUE PURPOSE									REVISION APPROVALS										SQUAD CHECK										

NO REPRESENTATION OR WARRANTY, EXPRESSED OR IMPLIED, IS MADE AS TO THE ACCURACY, COMPLETENESS OR USEFULNESS OF THE INFORMATION OR STATEMENTS CONTAINED IN THESE DRAWINGS, OR THAT THE USE OR DISCLOSURE OF ANY INFORMATION, APPARATUS, METHOD OR PROCESS DISCLOSED IN THESE DRAWINGS MAY NOT INFRINGE PRIVATE RIGHTS OF OTHERS. NO LIABILITY IS ASSUMED WITH RESPECT TO THE USE OF, OR FOR DAMAGES RESULTING FROM THE USE OF, ANY INFORMATION, APPARATUS, METHOD OR PROCESS DISCLOSED IN THESE DRAWINGS. DRAWINGS MADE AVAILABLE FOR INFORMATION TO BIDDER ARE NOT TO BE USED FOR OTHER PURPOSES, AND ARE TO BE RETURNED UPON REQUEST OF THE FORWARDING CONTRACTOR.

P THIS DRAWING PRODUCED ON PRO-ENGINEER

THIS DOCUMENT CONTROLLED BY
CHANGE CONTROL SYSTEM 3
ENGINEERING PROCEDURE SNS-ENG-G001

J3-62-33