GENERAL NOTES:
1) DIMENSIONS AND SYMBOLOGY ARE AMERICAN NATIONAL STANDARD UNLESS OTHERWISE SPECIFIED.
2) ROUGHNESS AVERAGE EQUALS 125 MICROINCHES UNLESS OTHERWISE SPECIFIED.
3) DIMENSIONS AND TOLERANCES ARE IN INCHES.
4) BREAK ALL SHARP EDGES.
5) TOLERANCES:
DECIMALS: .X = ±.060
.XX = ±.030
.XXX = ±.010
FRACTIONS: ±1/16
ANGULAR: ±1°

NEXT ASS'Y:
FINAL ASS'Y:

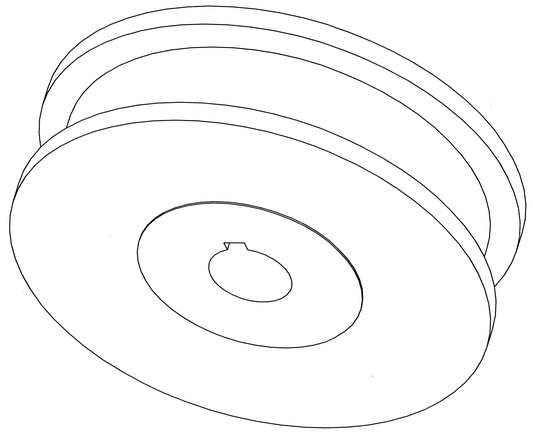

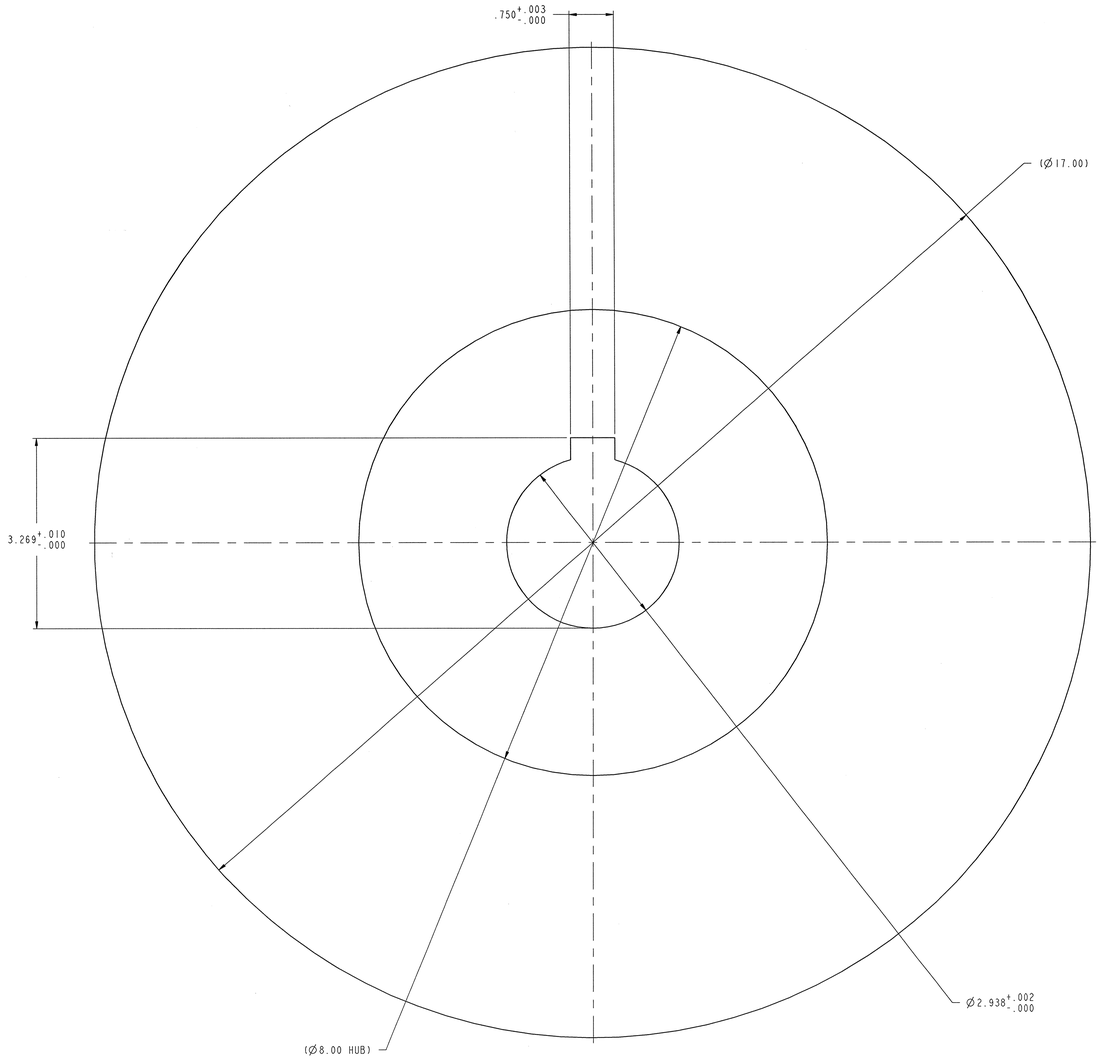

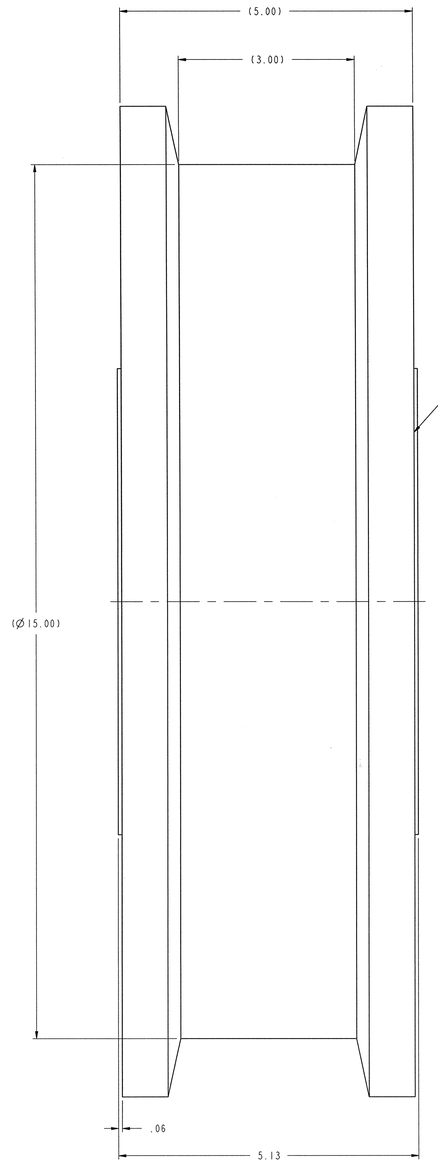

WHEEL, AISI C-1045/1050 STEEL, HARDENED TREAD TO 43-47 Rc, 25,000 LBF MINIMUM WHEEL CAPACITY, IRWIN CART AND EQUIPMENT P/N: WCL-153

NOTES:

1. FABRICATE ONE FLANGED WHEEL WITH KEYWAY, ONE WITHOUT. THE DRIVEN FLANGED WHEEL REQURIES A KEYWAY, THE IDLING FLANGED WHEEL DOES NOT.

SCALE: 1/1

108030700-J8E-8700-A204

Knight/Jacobs
Knight/Jacobs Joint Venture
701 Scarboro Road, MS 8253
Oak Ridge, TN 37830
865-241-9433
fax 865-241-3400

MERRICK Engineers & Architects

UT-BATTELLE
Oak Ridge National Laboratory, managed by UT-Battelle, LLC, for the U.S. Dept. of Energy under contract DE-AC05-00OR22725

PROJECT NAME:
SPALLATION NEUTRON SOURCE
TARGET BUILDING
CASK CART
FLANGED WHEEL DETAIL

I	48	49	50	PLANT	BLDG	FL	SH.	OF	TYPE	CLASS
3	J	X	X	8	8700	-	1	1	G	U

51	52	53	WBS	REV
NC	NA	IN	1.8.3.7	J3.61.33	0

REV	CHANGE TYPE	CHANGE CONTROL SYSTEM	CHANGE NUMBER	DESCRIPTION	DSN	CHK	DEPT	DATE	PE	DATE	PJ	DATE	REQ	DATE	UTB	DATE	RPE	RPE NO	DATE		ST	CV	EC	EE	EM	IE	M	PD	SE	AR
0				CERTIFIED FOR CONSTRUCTION - 10/26/01	NHL	TBO				11/14/01	RAP	11/26/01				11/13/01	TBO	106873	10/26/01										

REVISION OR ISSUE PURPOSE — REVISION APPROVALS — SQUAD CHECK

RPE
FLORIDA BOARD OF REGISTERED ARCHITECTS AND PROFESSIONAL ENGINEERS
REV. 0 DATE 10/23/01

DSN	M. Turner	10/23/01
DRW	R. Dick	11/5/01
CHK	T. Gehr	10/30/01
DEPT		
PE	T. Gehr	11/14/01
PJ	R. Dean	11/26/01
REQ		
UTB	M. Hewson	11/13/01

DRAWING APPROVALS

NO REPRESENTATION OR WARRANTY, EXPRESSED OR IMPLIED, IS MADE AS TO THE ACCURACY, COMPLETENESS OR USEFULNESS OF THE INFORMATION OR STATEMENTS CONTAINED IN THESE DRAWINGS, OR THAT THE USE OR DISCLOSURE OF ANY INFORMATION, APPARATUS, METHOD OR PROCESS DISCLOSED IN THESE DRAWINGS MAY NOT INFRINGE PRIVATE RIGHTS OF OTHERS. NO LIABILITY IS ASSUMED WITH RESPECT TO THE USE OF, OR FOR DAMAGES RESULTING FROM THE USE OF, ANY INFORMATION, APPARATUS, METHOD OR PROCESS DISCLOSED IN THESE DRAWINGS. DRAWINGS MADE AVAILABLE FOR INFORMATION TO BIDDER ARE NOT TO BE USED FOR OTHER PURPOSES, AND ARE TO BE RETURNED UPON REQUEST OF THE FORWARDING CONTRACTOR.

P THIS DRAWING PRODUCED ON PRO-ENGINEER

THIS DOCUMENT CONTROLLED BY
CHANGE CONTROL SYSTEM 3
ENGINEERING PROCEDURE SNS-ENG-G001