NEXT ASS'Y:

FINAL ASS'Y:

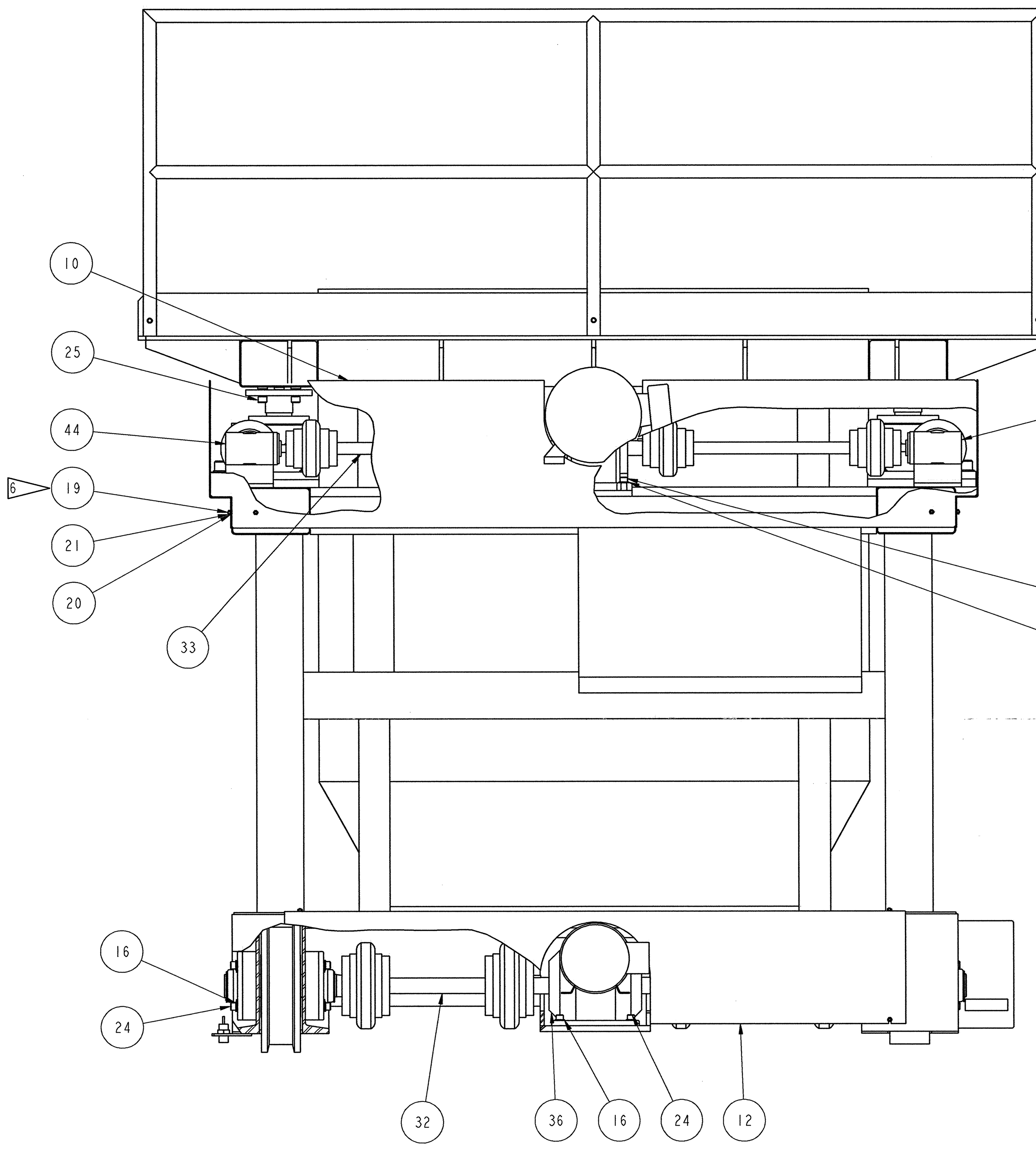

VIEW D-D

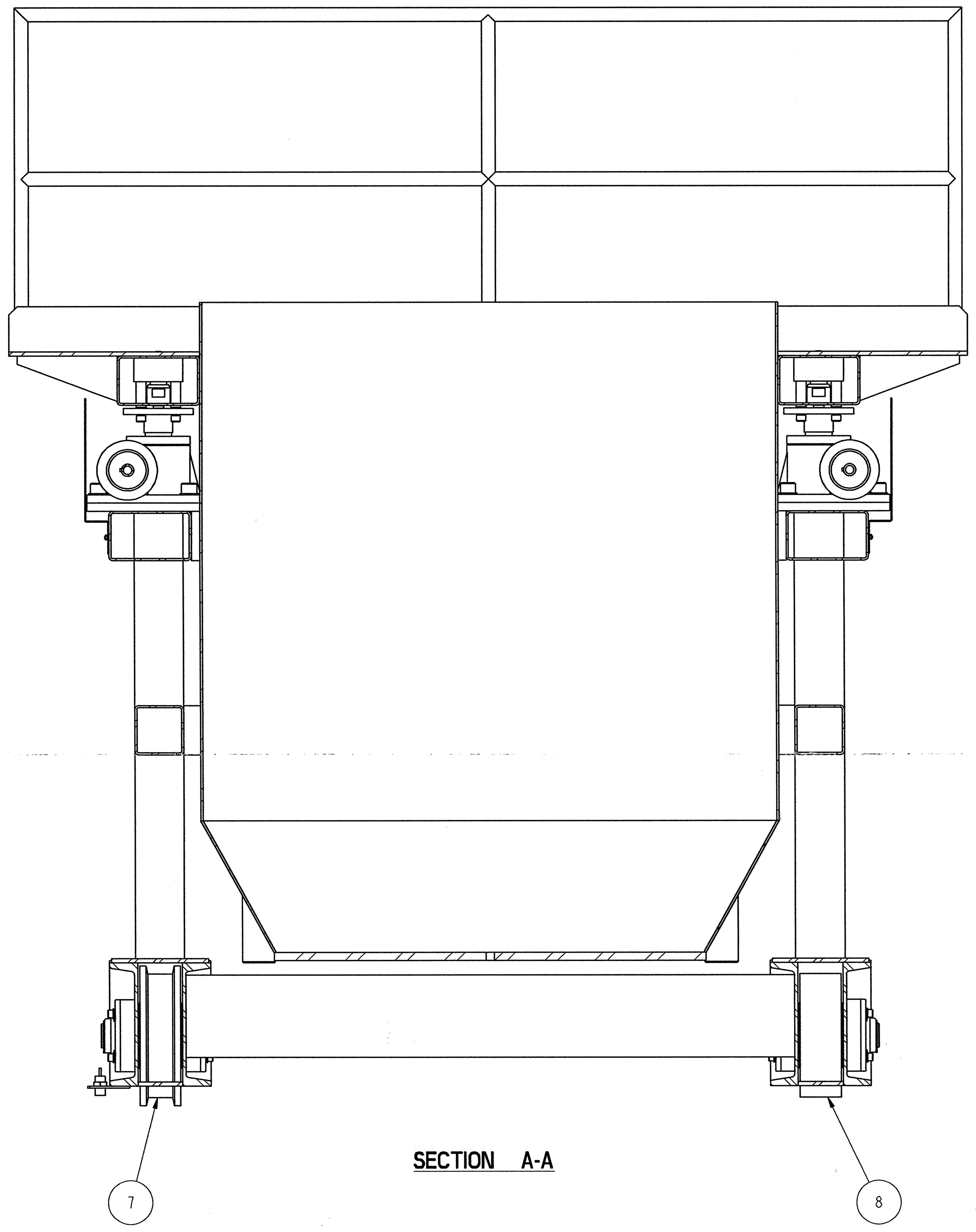

SECTION A-A

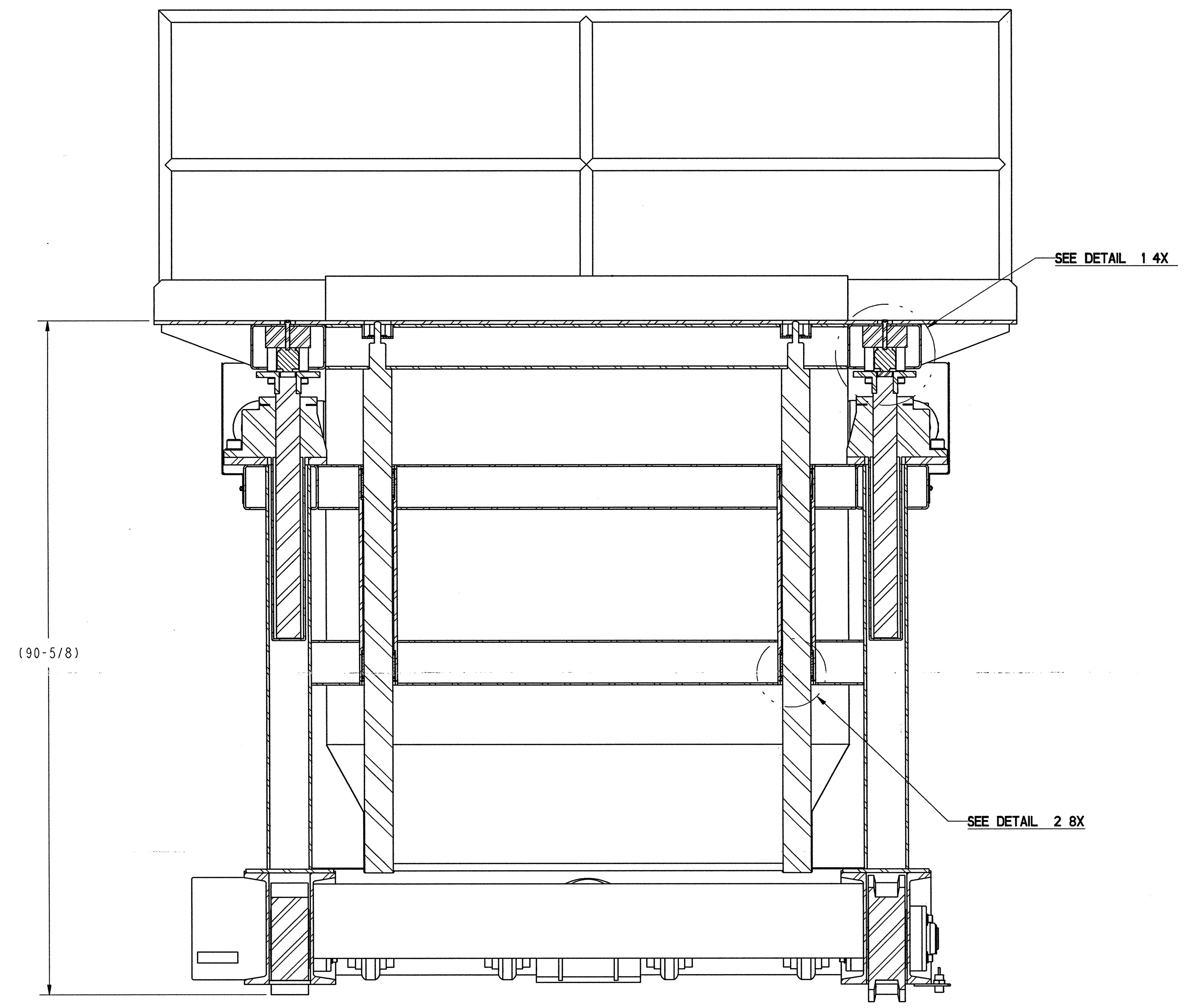

SECTION B-B

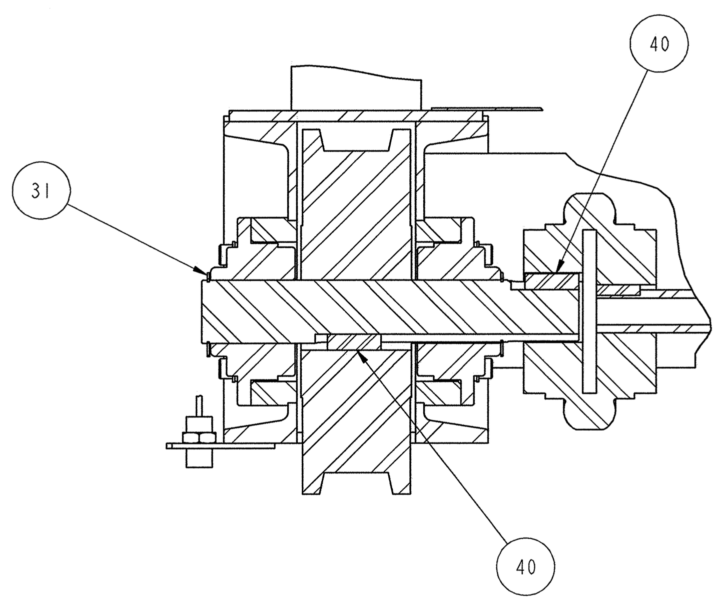

SECTION C-C
SCALE 3/16

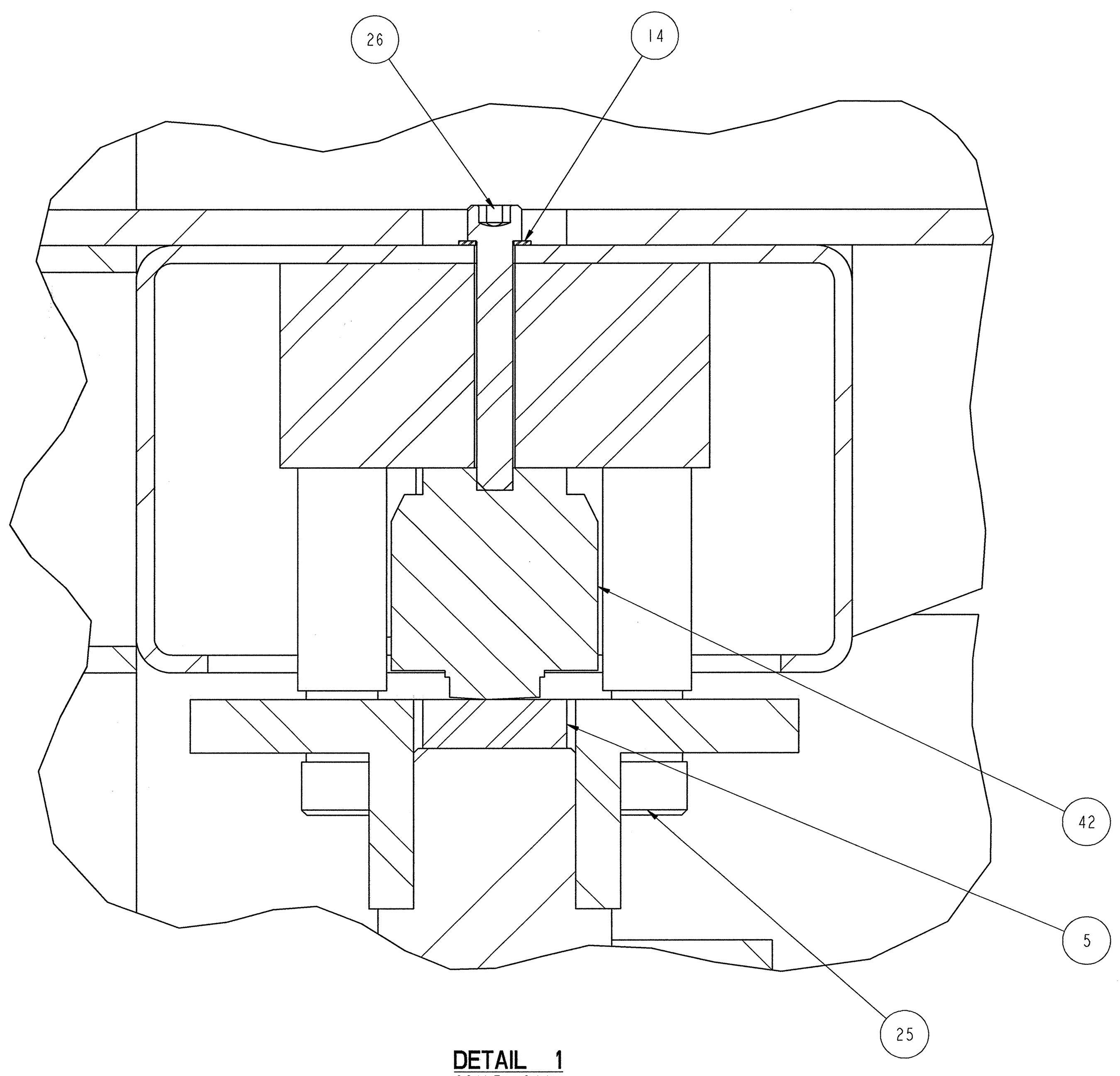

DETAIL 1
SCALE 3/4

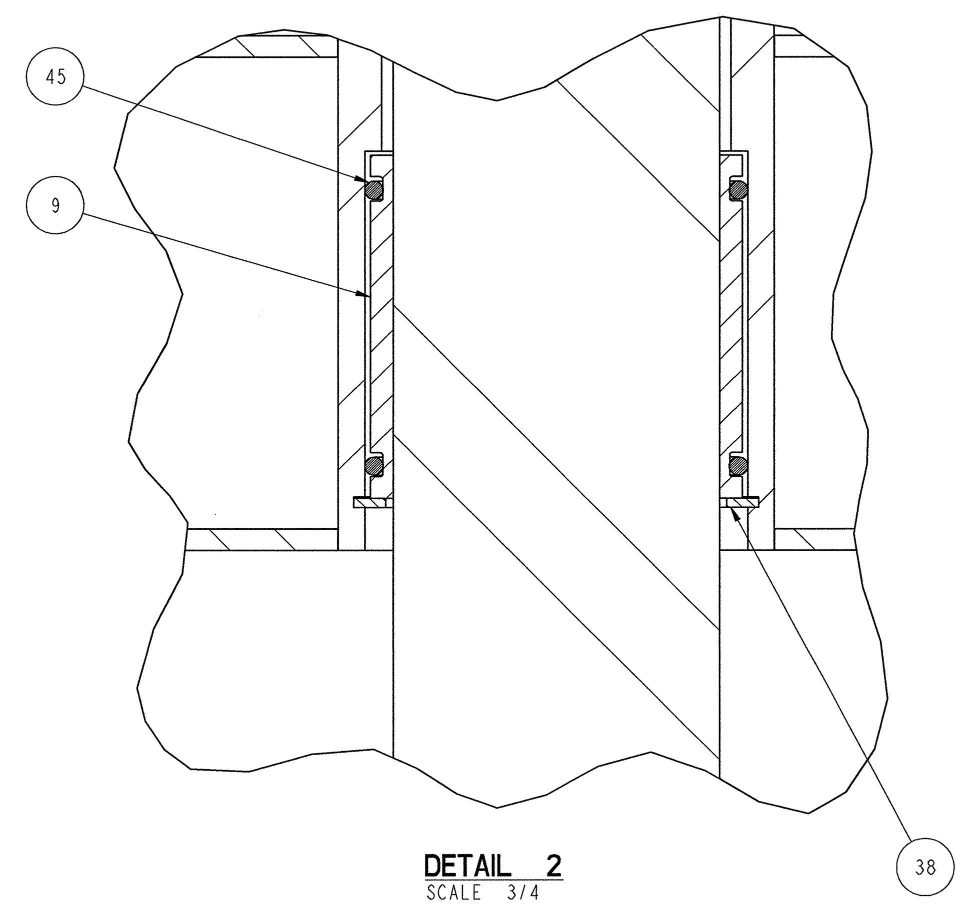

DETAIL 2
SCALE 3/4

J3-61-30

SCALE: 3/32

108030700-J8E-8700-A201

Knight/Jacobs Joint Venture
701 Scarboro Road, MS 8253
Oak Ridge, TN 37830
865-241-9433
fax865-241-3400

MERRICK Engineers & Architects

UT-BATTELLE

Oak Ridge National Laboratory, managed by UT-Battelle, LLC, for the U.S. Dept. of Energy under contract DE-AC05-00OR22725

PROJECT NAME:
SPALLATION NEUTRON SOURCE

TARGET BUILDING
CASK CART
ASSEMBLY

1	48	49	50	PLANT	BLDG	FL	SH.	OF	TYPE	CLASS
3	J	X	X	8	8700		1	1	G	U

51	52	53	WBS		REV
NC	NA	IN	1.8.3.7	J3.61.30	0

RPE		
DSN	M. Lumm	10/23/01
DRW	[signature]	10/23/01
CHK	[signature]	10/23/01
DEPT		
PE	M. Mann	11/14/01
PJ	RA Dean	11/12/01
REQ		
REV. 0 DATE 10/23/01	UTB [signature]	11/13/01

DRAWING APPROVALS

TORJE BUAROY OSEN REGISTERED ENGINEER AGRICULTURE COMMERCE NO. 00106873 STATE OF TENNESSEE

REV	CHANGE TYPE	CHANGE CONTROL SYSTEM	CHANGE REQUEST NUMBER	DESCRIPTION	DSN	CHK	DEPT	DATE	PE	DATE	PJ	DATE	REQ	DATE	UTB	DATE	RPE	RPE NO	DATE
0				CERTIFIED FOR CONSTRUCTION - 10/26/01	NHL	TBO			[initials]	11/14/01	RAD	11/12/01			[initials]	11/13/01	TBO	106873	10/26/01

REVISION OR ISSUE PURPOSE — REVISION APPROVALS

ST	CV	EC	EE	EM	IE	M	PD	SE	AR

SQUAD CHECK

NO REPRESENTATION OR WARRANTY, EXPRESSED OR IMPLIED, IS MADE AS TO THE ACCURACY, COMPLETENESS OR USEFULNESS OF THE INFORMATION OR STATEMENTS CONTAINED IN THESE DRAWINGS, OR THAT THE USE OR DISCLOSURE OF ANY INFORMATION, APPARATUS, METHOD OR PROCESS DISCLOSED IN THESE DRAWINGS MAY NOT INFRINGE PRIVATE RIGHTS OF OTHERS. NO LIABILITY IS ASSUMED WITH RESPECT TO THE USE OF, OR FOR DAMAGES RESULTING FROM THE USE OF, ANY INFORMATION, APPARATUS, METHOD OR PROCESS DISCLOSED IN THESE DRAWINGS. DRAWINGS MADE AVAILABLE FOR INFORMATION TO BIDDER ARE NOT TO BE USED FOR OTHER PURPOSES, AND ARE TO BE RETURNED UPON REQUEST OF THE FORWARDING CONTRACTOR.

P THIS DRAWING PRODUCED ON PRO-ENGINEER

THIS DOCUMENT CONTROLLED BY
CHANGE CONTROL SYSTEM 3
ENGINEERING PROCEDURE SNS-ENG-G001