GENERAL NOTES:
1) DIMENSIONS AND SYMBOLOGY ARE AMERICAN NATIONAL STANDARD UNLESS OTHERWISE SPECIFIED.
2) ROUGHNESS AVERAGE EQUALS 125 MICROINCHES UNLESS OTHERWISE SPECIFIED.
3) DIMENSIONS AND TOLERANCES ARE IN INCHES.
4) BREAK ALL SHARP EDGES.
5) TOLERANCES:
DECIMALS: .X = ±.060
.XX = ±.030
.XXX = ±.010
FRACTIONS: ±1/16
ANGULAR: ±1°

NOTES:

1. SEE DRAWINGS J3.60.32, J3.60.33, AND J3.60.34 FOR ADDITIONAL CASK CART FRAME WELDMENT DETAILS.
2. THE NOTES BELOW APPLY TO DRAWING J3.60.32, J3.60.33, AND J3.60.34 AS WELL.
3. THIS COMPONENT IS SUBJECT TO THE REQUIREMENTS SET FORTH IN SECTION 15065.
4. INDICATED PLATES MUST BE THICKER THAN NOMINAL DIMENSION PRIOR TO MACHINING. IT IS LEFT UP TO THE FABRICATORS DISCRETION TO DETERMINE THE ADDITIONAL PLATE THICKNESS IN ORDER TO MEET SPECIFIED DIMENSIONS AND TOLERANCES.
5. HOLES FOR ROUND TUBING SHALL BE MACHINED AFTER WELDMENT IS CREATED.
6. HOLES FOR FLANGE BEARING SHALL BE MACHINED AFTER WELDMENT IS CREATED.
7. THIS COMPONENT SHALL BE PRIMED AND PAINTED IN ACCORDANCE WITH SECTION 09960.
8. MASK HOLES AND HOLES WITH THREADS.
9. DO NOT PAINT THESE SURFACES.
10. COMPONENT WEIGHT: 4914 LBS.

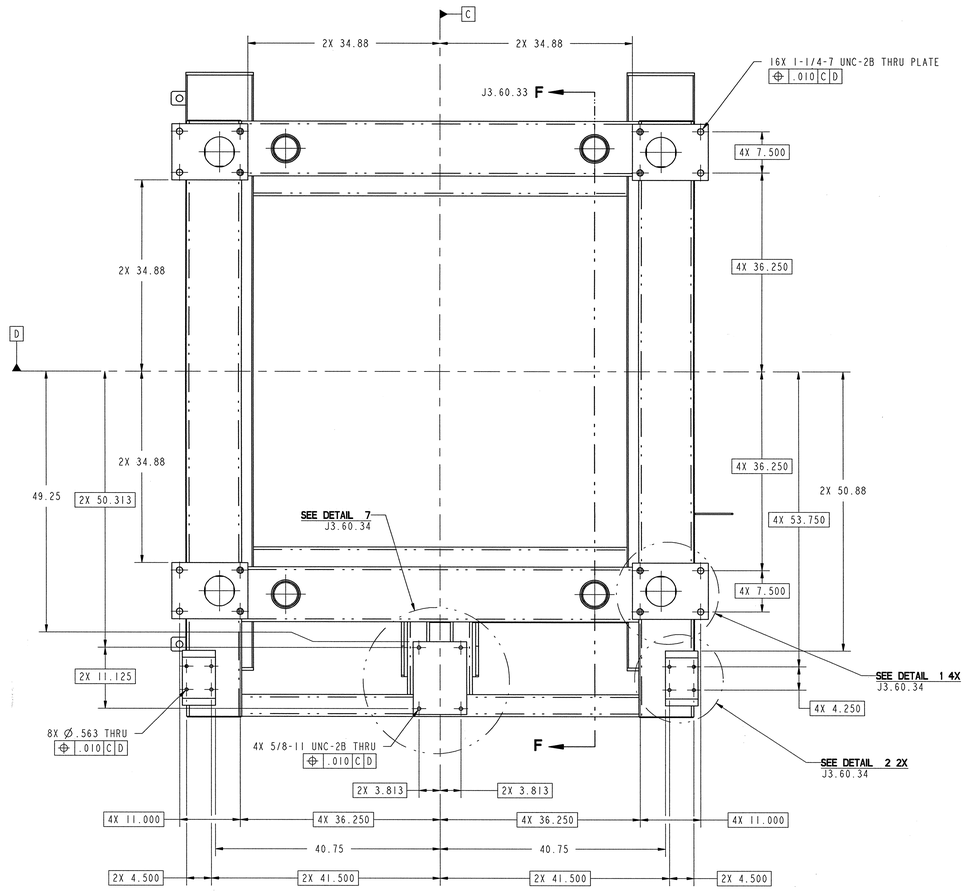

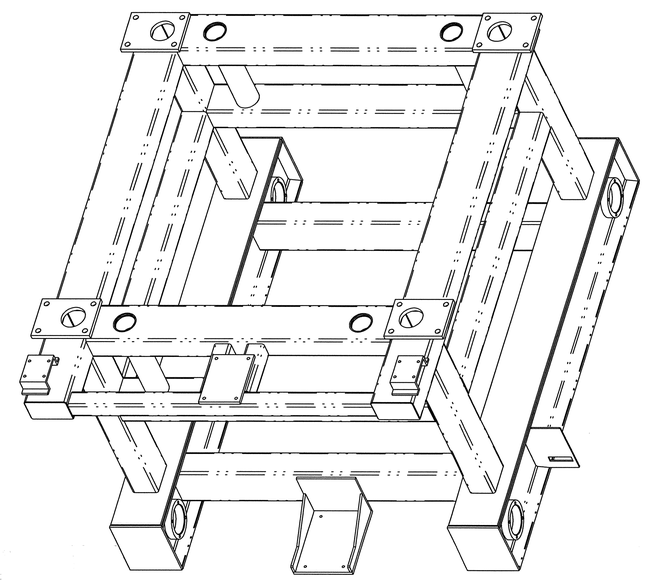

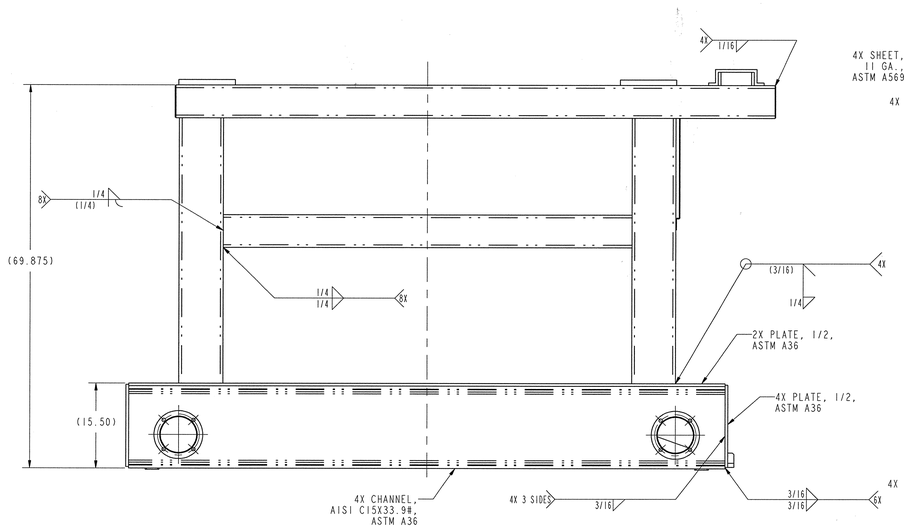

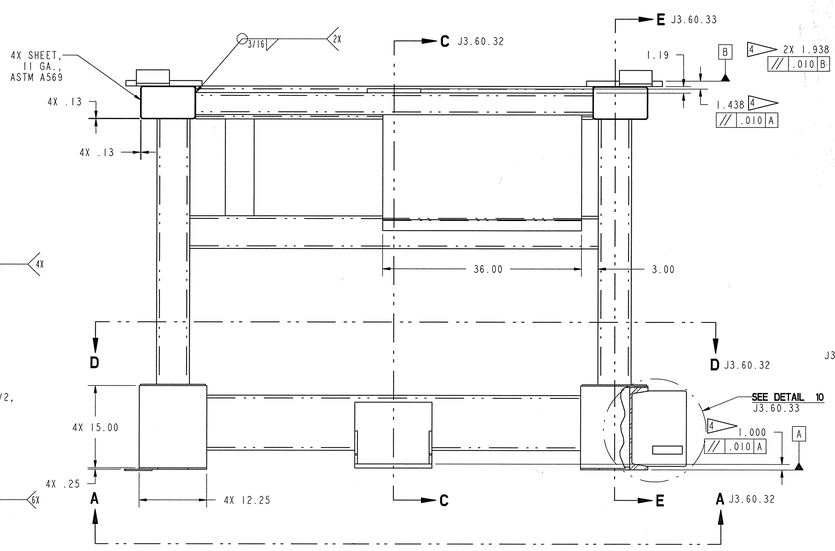

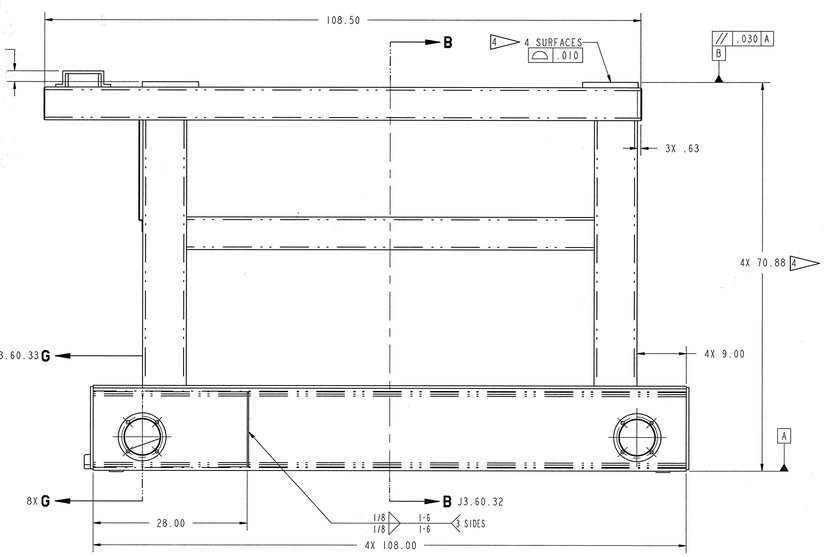

SCALE: 3/32

J3-60-31

108030700-J8E-8700-A194

Knight/Jacobs Joint Venture
701 Scarboro Road, MS 8253
Oak Ridge, TN 37830
865-241-9433
Fax 865-241-3400

MERRICK Engineers & Architects

UT-BATTELLE — Oak Ridge National Laboratory, managed by UT-Battelle, LLC, for the U.S. Dept. of Energy under contract DE-AC05-00OR22725

PROJECT NAME: SPALLATION NEUTRON SOURCE

TARGET BUILDING
CASK CART
FRAME WELDMENT

I	4B	49	50	PLANT	BLDG	FL	SH.	OF	TYPE	CLASS
3	J	X	X	8	8700		1	1	G	U.
51		52		53	WBS					REV
NC		NA		IN	1.8.3.7	J3.60.31				0

DSN	N. Lenn	10/23/01
DRW	D. Smith	10/27/01
CHK	T. Cain	10/25/01
DEPT		
PE	T.T. Larson	11/14/01
PJ	R.A. Dean	11/12/01
REQ		
UTB	M. Fenner	11/26/01

RPE — REV. 0 DATE 10/23/01 — DRAWING APPROVALS

REV	CHANGE TYPE	CHANGE CONTROL	CHANGE NUMBER	DESCRIPTION	DSN	CHK	DEPT	DATE	PE	DATE	PJ	DATE	REQ	DATE	UTB	DATE	RPE	RPE NO	DATE	ST	CV	EC	EE	EM	IE	M	PD	SE	AR
0				CERTIFIED FOR CONSTRUCTION - 10/26/01	NHL	TBO			TTL	11/14/01	RAD	11/12/01			MF	11/13/01	TBO	106873	10/26/01										

REVISION OR ISSUE PURPOSE — REVISION APPROVALS — SQUAD CHECK

NO REPRESENTATION OR WARRANTY, EXPRESSED OR IMPLIED, IS MADE AS TO THE ACCURACY, COMPLETENESS OR USEFULNESS OF THE INFORMATION OR STATEMENTS CONTAINED IN THESE DRAWINGS, OR THAT THE USE OR DISCLOSURE OF ANY INFORMATION, APPARATUS, METHOD OR PROCESS DISCLOSED IN THESE DRAWINGS MAY NOT INFRINGE PRIVATE RIGHTS OF OTHERS. NO LIABILITY IS ASSUMED WITH RESPECT TO THE USE OF, OR FOR DAMAGES RESULTING FROM THE USE OF, ANY INFORMATION, APPARATUS, METHOD OR PROCESS DISCLOSED IN THESE DRAWINGS. DRAWINGS MADE AVAILABLE FOR INFORMATION TO BIDDER ARE NOT TO BE USED FOR OTHER PURPOSES, AND ARE TO BE RETURNED UPON REQUEST OF THE FORWARDING CONTRACTOR.

P THIS DRAWING PRODUCED ON PRO-ENGINEER

THIS DOCUMENT CONTROLLED BY
CHANGE CONTROL SYSTEM 3
ENGINEERING PROCEDURE SNS-ENG-G001