GENERAL NOTES
1) DIMENSIONS AND SYMBOLOGY ARE AMERICAN NATIONAL STANDARD UNLESS OTHERWISE SPECIFIED.
2) DIMENSIONS AND TOLERANCES ARE IN INCHES.
3) BREAK ALL SHARP EDGES.
4) MACHINED SURFACE ROUGHNESS 125 rms OR BETTER.
5) TOLERANCES:
DECIMALS: .X = ± .060
.XX = ± .030
.XXX = ± .010
FRACTIONS: ± 1/16
ANGULAR: ± 1°

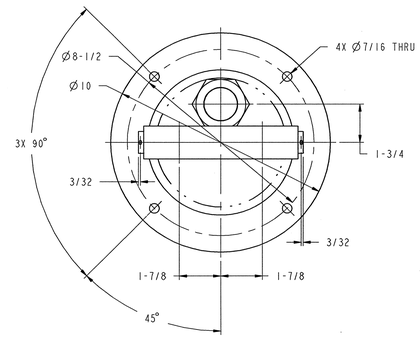

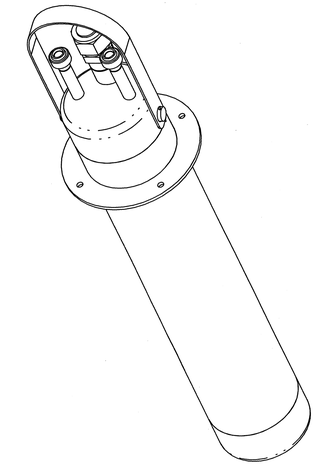

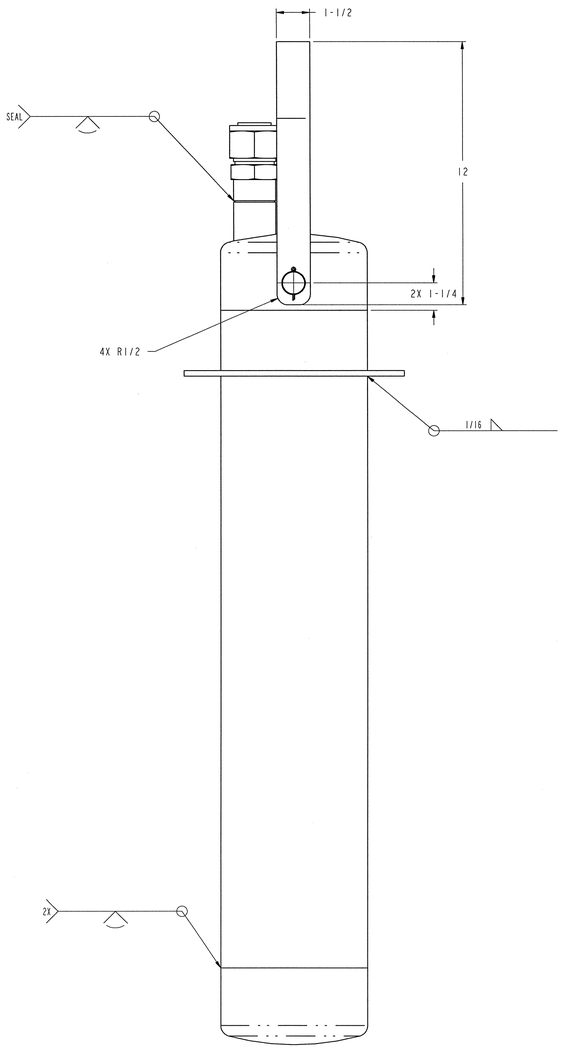

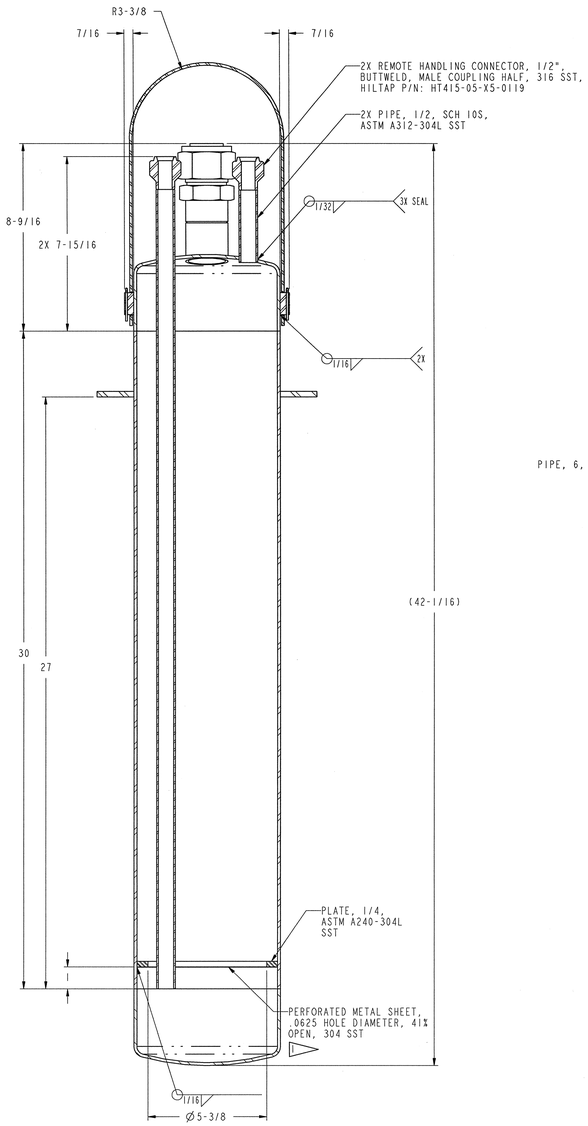

SECTION A-A

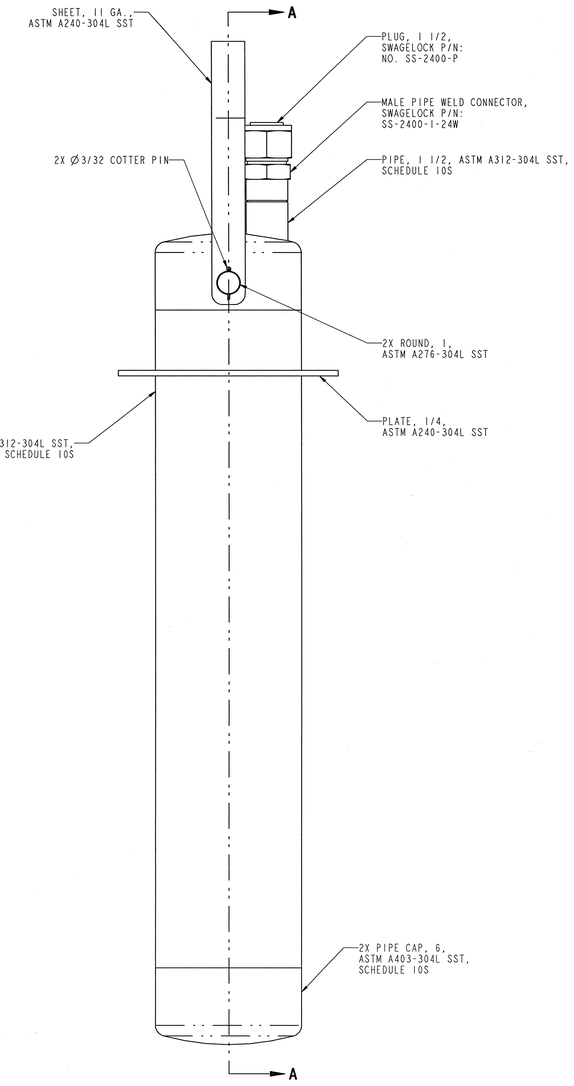

NOTES:

1. WELD SHEET TO BACKING RING AROUND THE ENTIRE PERIMETER.
2. THIS COMPONENT IS SUBJECT TO THE REQUIREMENTS SET FORTH IN SECTION 15065.

SCALE: 3/8

108030700-J8E-8700-A068

Knight/Jacobs Joint Venture
701 Scarboro Road, MS 8253
Oak Ridge, TN 37830
865-241-9433
fax865-241-3400

MERRICK Engineers & Architects

UT-BATTELLE — Oak Ridge National Laboratory, managed by UT-Battelle, LLC, for the U.S. Dept. of Energy under contract DE-AC05-000R22725

PROJECT NAME:
SPALLATION NEUTRON SOURCE
TARGET BUILDING
ABS-8001 AND ABS-8002 COMPONENT DRAWING

1	48	49	50	PLANT	BLDG	FL	SH.	OF	TYPE	CLASS
3	J	X	X	8	8700		1	1	G	U

51	52	53	WBS		REV
NC	NA	IN	1.8.3.7	J3.56.31	0

RPE — MATTHEW JAMES NIELSEN, REGISTERED ENGINEER, AGRICULTURE, COMMERCE, STATE OF TENNESSEE

DSN	P. Dodd	10/27/01
DRW	P. Dodd	10/27/01
CHK	MJN	10/25/01
DEPT		
PE	R Gaussen	11/13/01
PJ	R A Gaussen	11/12/01
REQ		
UTB	M Nielsen	11/19/01

REV. 0 DATE 10-25-01 DRAWING APPROVALS

REV	CHANGE TYPE	CHANGED SYSTEM	CHANGED MODELS	DESCRIPTION	DSN	CHK	DEPT	DATE	PE	DATE	PJ	DATE	REQ	DATE	UTB	DATE	RPE	RPE NO	DATE	ST	CV	EC	EE	EM	IE	M	PD	SE	AR
0				CERTIFIED FOR CONSTRUCTION - 10/26/01	PCD	MJK			RAG	11/13/01	RAG	11/12/01	-		MJN	11/19/01	MJK	107067	10/26/01										

REVISION OR ISSUE PURPOSE — REVISION APPROVALS — SQUAD CHECK

NO REPRESENTATION OR WARRANTY,EXPRESSED OR IMPLIED,IS MADE AS TO THE ACCURACY, COMPLETENESS OR USEFULNESS OF THE INFORMATION OR STATEMENTS CONTAINED IN THESE DRAWINGS, OR THAT THE USE OR DISCLOSURE OF ANY INFORMATION, APPARATUS, METHOD OR PROCESS DISCLOSED IN THESE DRAWINGS MAY NOT INFRINGE PRIVATE RIGHTS OF OTHERS. NO LIABILITY IS ASSUMED WITH RESPECT TO THE USE OF, OR FOR DAMAGES RESULTING FROM THE USE OF, ANY INFORMATION, APPARATUS, METHOD OR PROCESS DISCLOSED IN THESE DRAWINGS. DRAWINGS MADE AVAILABLE FOR INFORMATION TO BIDDER ARE NOT TO BE USED FOR OTHER PURPOSES, AND ARE TO BE RETURNED UPON REQUEST OF THE FORWARDING CONTRACTOR.

P THIS DRAWING PRODUCED ON PRO-ENGINEER

THIS DOCUMENT CONTROLLED BY
CHANGE CONTROL SYSTEM 3
ENGINEERING PROCEDURE SNS-ENG-G001