GENERAL NOTES:
1) DIMENSIONS AND SYMBOLOGY ARE AMERICAN NATIONAL STANDARD UNLESS OTHERWISE SPECIFIED.
2) ROUGHNESS AVERAGE EQUALS 125 MICROINCHES UNLESS OTHERWISE SPECIFIED.
3) DIMENSIONS AND TOLERANCES ARE IN INCHES.
4) BREAK ALL SHARP EDGES.
5) TOLERANCES:
DECIMALS: .X = ±.060
.XX = ±.030
.XXX = ±.010
FRACTIONS: ±1/16
ANGULAR: ±1°

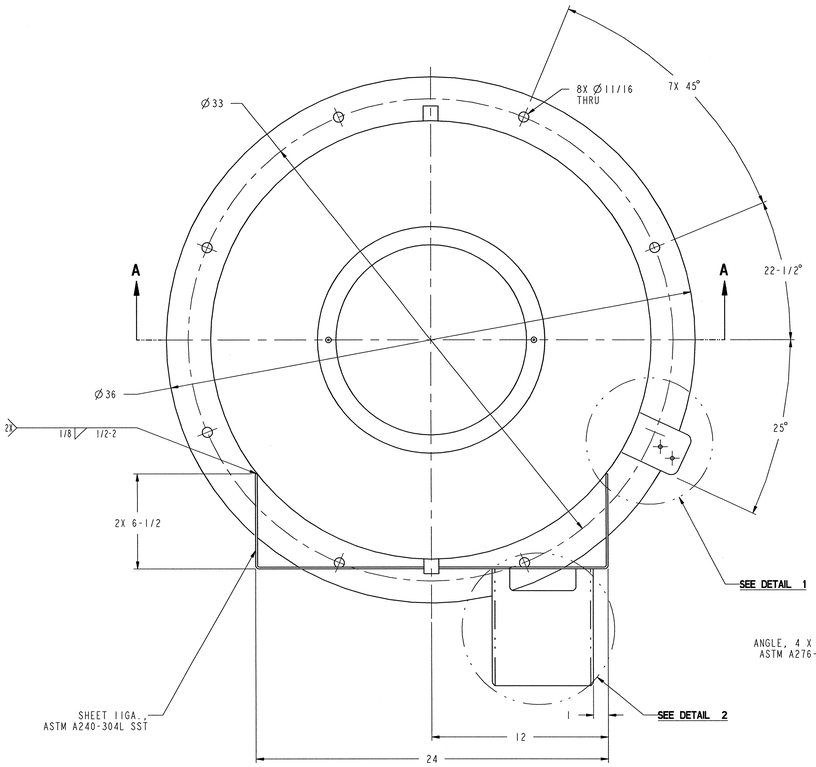

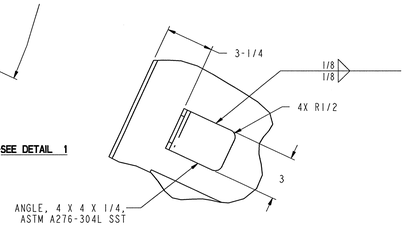

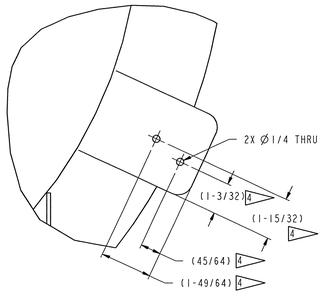

DETAIL 1
SCALE 1/2

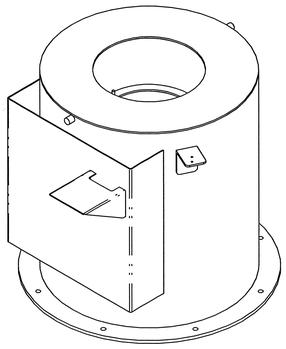

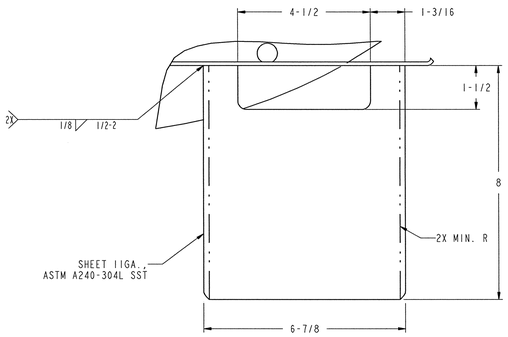

DETAIL 2
SCALE 1/2

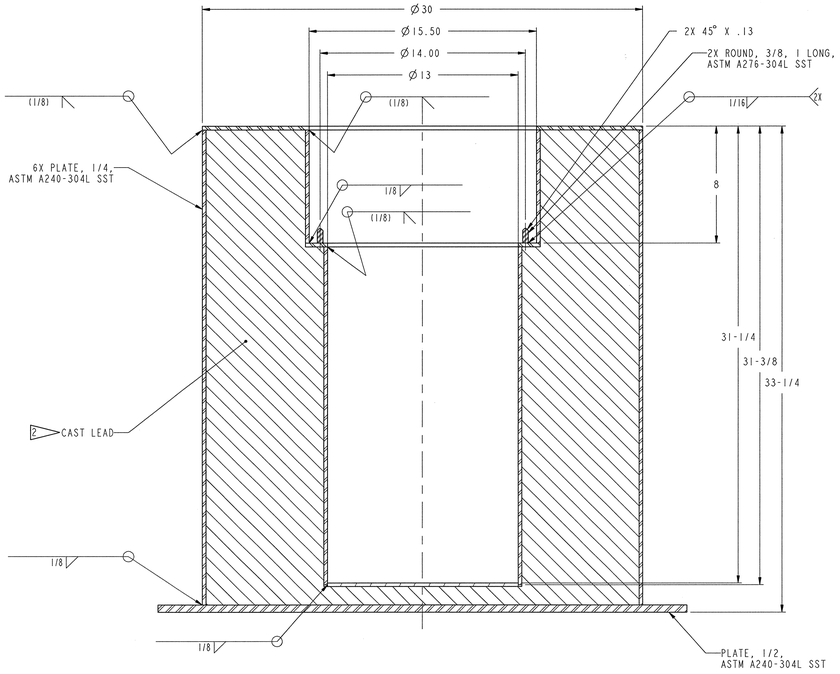

SECTION A-A

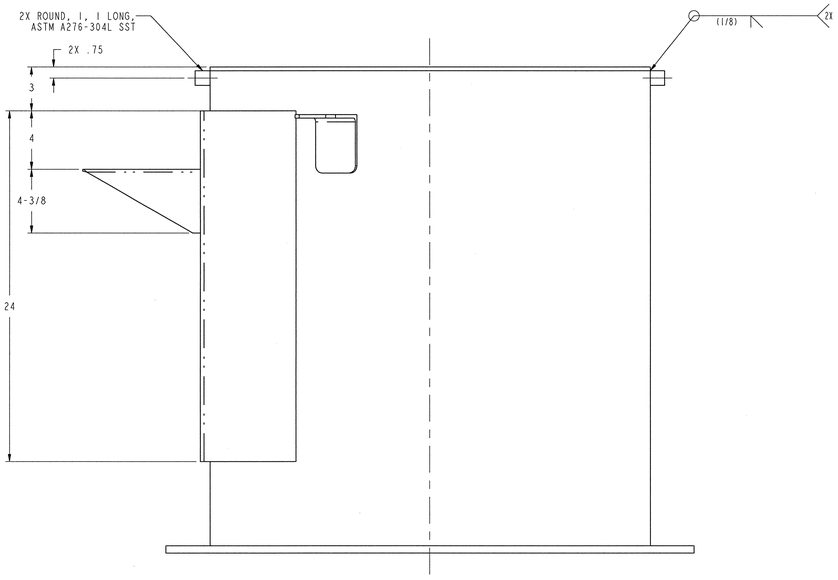

NOTES:

1. THIS COMPONENT IS SUBJECT TO THE REQUIREMENTS SET FORTH IN SECTION 15065.
2. IT IS LEFT UP TO THE FABRICATOR TO DECIDE ON HOW TO FILL INDICATED CAVITIES WITH THE LEAD. FABRICATOR IS PERMITTED TO WELD REINFORCEMENT RINGS TO THE OUTER AND INNER CYLINDERS TO LIMIT DISTORTION FROM THE HOT LEAD. THE RINGS SHALL PROTRUDE A MAXIMUM TWO INCHES FROM EACH CYLINDER. ONLY RECYCLED LEAD SHALL BE USED. THE PACKING DENSITY OF THE LEAD SHALL BE A MINIMUM OF 750 LB/FT3.
3. COMPONENT WEIGHT STEEL: 558 LBS.
COMPONENT WEIGHT LEAD (MINIMUM): 7077 LBS.
4. DRILL AND TAP ON ASSEMBLY WITH THE SOLENOID VALVE.

SCALE: 1/4

108030700-J8E-8700-A191

Knight/Jacobs Joint Venture
701 Scarboro Road, MS 8253
Oak Ridge, TN 37830
865-241-9433
fax 865-241-3400

MERRICK Engineers & Architects

UT-BATTELLE
Oak Ridge National Laboratory, managed by UT-Battelle, LLC, for the U.S. Dept. of Energy under contract DE-AC05-00OR22725

PROJECT NAME:
SPALLATION NEUTRON SOURCE
TARGET BUILDING
XENON CRYOGENIC CARBON BED
EXTERNAL SHIELDING HOUSING

1	48	49	50	PLANT	BLDG	FL	SH.	OF	TYPE	CLASS
3	J	X	X	8	8700		1	1	G	U.
51		52		53	WBS					REV
NC		NA		IN	1.8.3.7	J3.55.36				0

REV	CHANGE TYPE	CHANGE SYSTEM	CHANGE NUMBER	DESCRIPTION	PCD	TBO			PE	DATE	PJ	DATE	REQ	DATE	UTB	DATE	RPE	RPE NO	DATE	ST	CV	EC	EE	EM	IE	M	PD	SE	AR
0				CERTIFIED FOR CONSTRUCTION - 10/26/01						10/26/01	RPD	11/26/01				11/26/01		TBO 106873	10/26/01										
REV				DESCRIPTION	DSN	CHK	DEPT	DATE	PE	DATE	PJ	DATE	REQ	DATE	UTB	DATE	RPE	RPE NO	DATE	ST	CV	EC	EE	EM	IE	M	PD	SE	AR
REVISION OR ISSUE PURPOSE					REVISION APPROVALS														SQUAD CHECK										

RPE
REGISTERED ENGINEER
LOUIS BUARO
STATE OF TENNESSEE

DSN		10/26/01
DRW		10/26/01
CHK		10/26/01
DEPT		
PE		11/13/01
PJ		11/13/01
REQ		
REV. 0	DATE 10/25/01	
UTB		11/13/01

DRAWING APPROVALS

NO REPRESENTATION OR WARRANTY, EXPRESSED OR IMPLIED, IS MADE AS TO THE ACCURACY, COMPLETENESS OR USEFULNESS OF THE INFORMATION OR STATEMENTS CONTAINED IN THESE DRAWINGS, OR THAT THE USE OR DISCLOSURE OF ANY INFORMATION, APPARATUS, METHOD OR PROCESS DISCLOSED IN THESE DRAWINGS MAY NOT INFRINGE PRIVATE RIGHTS OF OTHERS. NO LIABILITY IS ASSUMED WITH RESPECT TO THE USE OF, OR FOR DAMAGES RESULTING FROM THE USE OF, ANY INFORMATION, APPARATUS, METHOD OR PROCESS DISCLOSED IN THESE DRAWINGS. DRAWINGS MADE AVAILABLE FOR INFORMATION TO BIDDER ARE NOT TO BE USED FOR OTHER PURPOSES, AND ARE TO BE RETURNED UPON REQUEST OF THE FORWARDING CONTRACTOR.

P THIS DRAWING PRODUCED ON PRO-ENGINEER

THIS DOCUMENT CONTROLLED BY
CHANGE CONTROL SYSTEM 3
ENGINEERING PROCEDURE SNS-ENG-G001

J3.55.36