NEXT ASS'Y:

FINAL ASS'Y:

PARTS LIST

PART NO.	DRAWING NO.	DESCRIPTION	QTY
1	J3.15.30	PUSH-THROUGH FILTER ASSEMBLY	2
2	J3.16.30	GLOVEBOX LIGHT WINDOW ASSEMBLY	1
3	J3.20.37	GAGE BRACKET	1
4	J3.20.38	10 INCH BAG RING COVER	1
5	J3.30.34	15 X 33 WINDOW ASSEMBLY	1
6	J3.55.31	TRITIUM REMOVAL GLOVEBOX STAND WELDMENT	1
7	J3.55.32	TRITIUM REMOVAL GLOVEBOX SHELL WELDMENT	1
8	J3.55.33	TRITIUM REMOVAL EXTERNAL PIPING ASSEMBLY	1
9	J3.55.34	TRITIUM REMOVAL INTERNAL PIPING ASSEMBLY	1
10	J3.55.35	TRITIUM REMOVAL EXTERNAL PIPING ASSEMBLY	1
11	J3.55.36	XENON CRYOGENIC CARBON BED EXTERNAL SHIELDING HOUSING	1
12	J3.55.37	XENON CRYOGENIC CARBON BED EXTERNAL SHIELDING COVER	1
13	J3.56.31	ABS-8001 AND ABS-8002 COMPONENT DRAWING	1
14	J3.57.31	ABS-8005 COMPONENT DRAWING	2
15	J3.58.31	ABS-8008 COMPONENT DRAWING	1
16	J3.58.32	HX-8007 COMPONENT DRAWING	1
17	J3.59.31	R-8004 COMPONENT DRAWING	1
18		WELD STUD, MALE, 1/4-20 UNC X 1/2 LG., AISI TYPE 304L SST	25
19		WASHER, PLAIN, TYPE B, NARROW, 1/4, AISI 300 SERIES SST	25
20		ACORN NUT, HIGH CROWN, 1/4-20 UNC, AISI 300 SERIES SST	25
21		SCREW, HEX, 1/4-20 UNC X 1 LG., ASTM F593 GROUP 1CW	4
22		WELD STUD, MALE, 3/8-16 UNC X 5/8 LG., AISI TYPE 304L SST	4
23		WASHER, PLAIN, TYPE B, NARROW, 3/8, AISI 300 SERIES SST	4
24		ACORN NUT, HIGH CROWN, 3/8-16 UNC, AISI 300 SERIES SST	4
25		8 INCH GLOVE AMBIDEXTROUS, 15 MIL, NEOPRENE	2
26		GASKET, 3/16 THICK, 12 OD X 10 1/8 ID, 40-50 DURO, NEOPRENE	1
27		GENL PURPOSE HEATER, CHROMALOX P/N: SL-N-1-30-0-10-120V-150W	1
28		MAGNEHELIC DIFFERENTIAL PRESSURE GAUGE, DWYER P/N: 2002	3
29		OVERHEAD LIGHT, ERICSON P/N: 1239-4F	1
30		SQUARE HEAD PLUG, 1/4 MNPT, STAINLESS STEEL	2

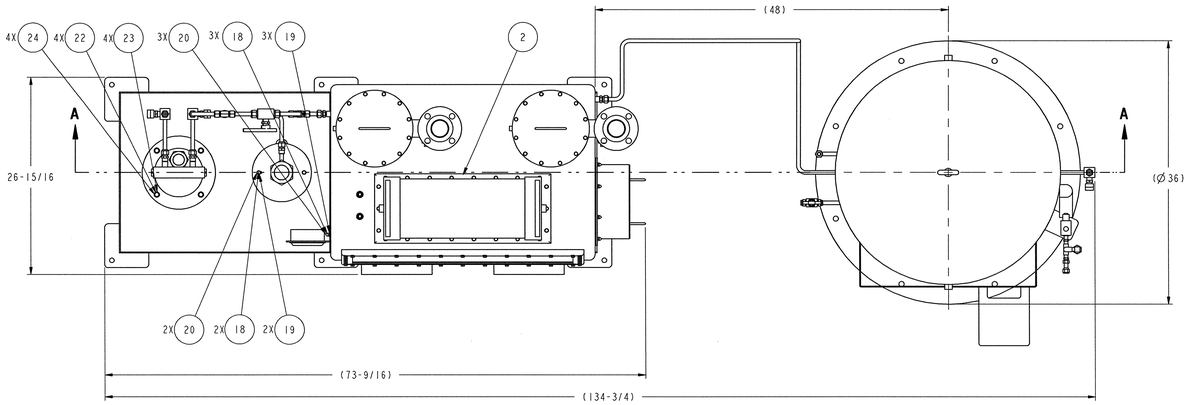

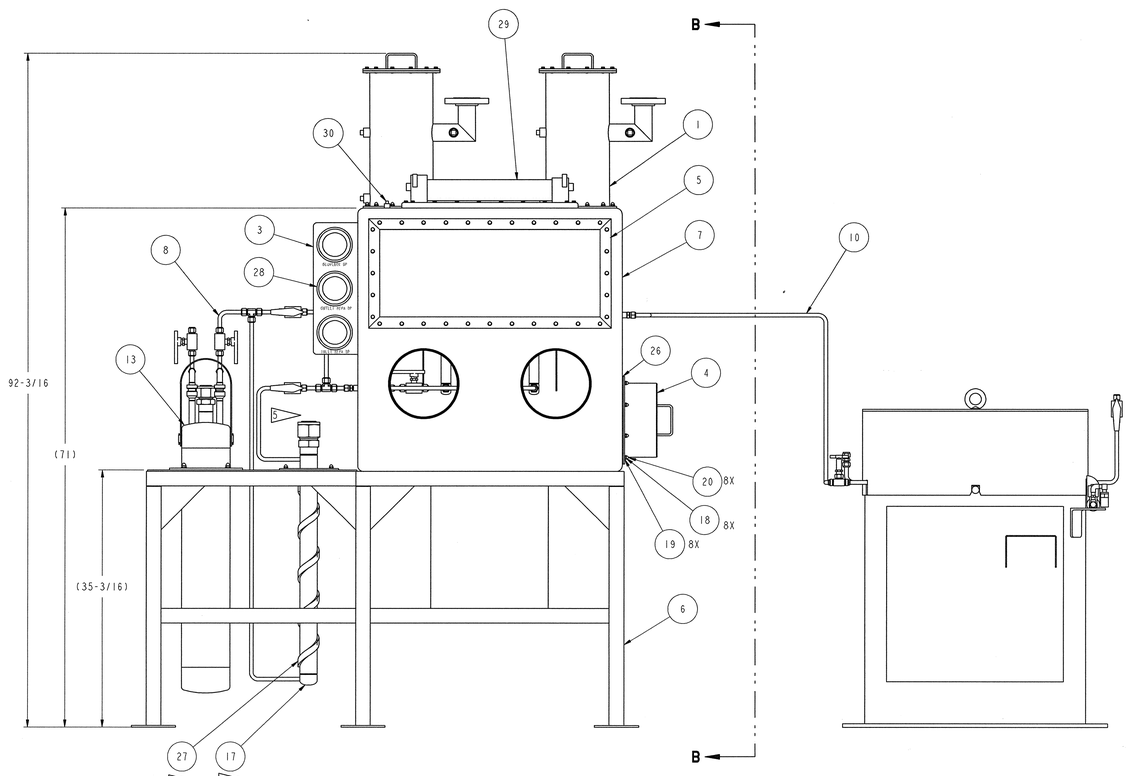

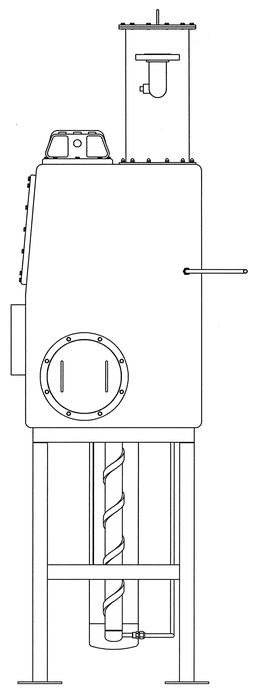

VIEW B-B

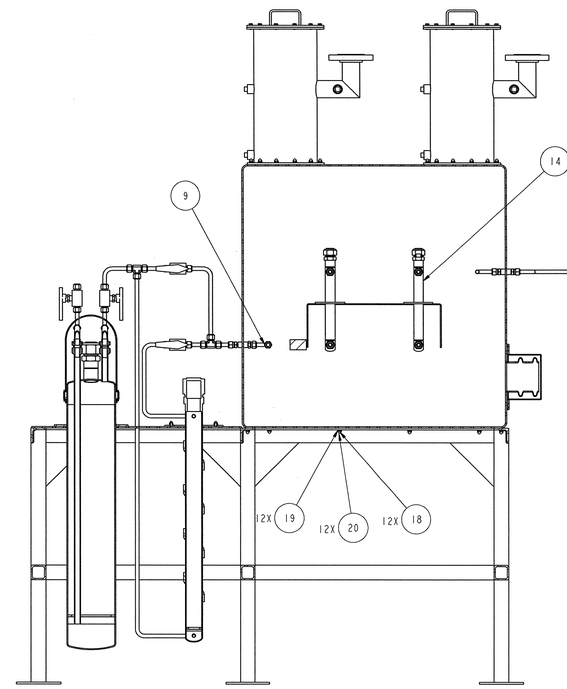

SECTION A-A

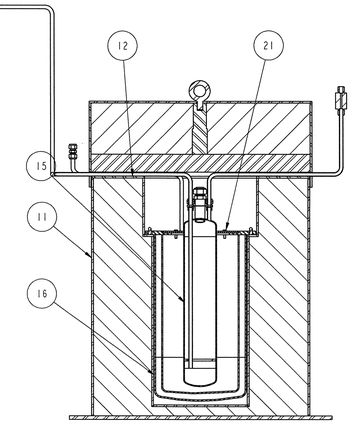

NOTES:

1. THIS COMPONENT SHALL BE SUBJECT TO THE REQUIREMENTS SET FORTH IN SECTION 15065.
2. THE FABRICATOR IS RESPONSIBLE FOR PLUMBING TO THE MAGNEHELIC GAUGES. USE THE FOLLOWING ACCEPTABLE PLUMBING COMPONENTS.
   - TUBING: 1/4" X .035" WALL, ASTM A269-304L SST.
   - FITTINGS: 1/4" SST SWAGELOK TUBE WITH 1/8" AND/OR 1/4" NPT FITTINGS AND 1/4" SST UNION SWAGELOK TUBE FITTINGS.

3 SPECIFY THE HEATER TO INCLUDE PRESSURE SENSITIVE ADHESIVE FROM THE FACTORY.

4 R-8004 SHALL BE INSULATED USING PIPE SYSTEM D "REMOVABLE REUSABLE INSULATION JACKET" FROM SECTION 15250.

5 R-8004 DISCHARGE TUBING FROM REACTOR TO THE GLOVEBOX SHALL BE CAGED. USE PERFORATED SHEET METAL WITH Ø3/8" HOLES MAXIMUM. SHEETMETAL SHALL BE A MINIMUM ONE INCH AWAY FROM TUBING. DO NOT CAGE HANDLE OF BALL VALVE.

6. REFERENCE DRAWING J1.27.31 FOR TRITIUM REMOVAL GLOVEBOX ELECTRICAL DETAILS.

SCALE: 1/8

J3-55-30

108030700-J8E-8700-A067

Knight/Jacobs Joint Venture
701 Scarboro Road, MS 8253
Oak Ridge, TN 37830
865-241-9433
fax 865-241-3400

MERRICK Engineers & Architects

UT-BATTELLE

Oak Ridge National Laboratory, managed by UT-Battelle, LLC, for the U.S. Dept. of Energy under contract DE-AC05-00OR22725

PROJECT NAME:

SPALLATION NEUTRON SOURCE

TARGET BUILDING
TRITIUM REMOVAL GLOVEBOX
ASSEMBLY

1	48	49	50	PLANT	BLDG	FL	SH.	OF	TYPE	CLASS
3	J	X	X	8	8700		1	1	G	U

51	52	53	WBS	REV
NC	NA	IN	1.8.3.7	J3.55.30	0

DSN	P. D. [illegible]	10/26/01
DRW	P. D. [illegible]	11/20/01
CHK	[illegible]	10/25/01
DEPT		
PE	[illegible]	11/13/01
PJ	R. A. Dean	11/20/01
REQ		
UTB	[illegible]	11/27/01

RPE

REV. 0 DATE 10/23/07

DRAWING APPROVALS

| REV | CHANGE TYPE | CHANGE SYSTEM | CHANGE NUMBER | DESCRIPTION | PCD | TBO | | |