GENERAL NOTES:
1) DIMENSIONS AND SYMBOLOGY ARE AMERICAN NATIONAL STANDARD UNLESS OTHERWISE SPECIFIED.
2) ROUGHNESS AVERAGE EQUALS 125 MICROINCHES UNLESS OTHERWISE SPECIFIED.
3) DIMENSIONS AND TOLERANCES ARE IN INCHES.
4) BREAK ALL SHARP EDGES.
5) TOLERANCES:
DECIMALS: .X = ±.060
.XX = ±.030
.XXX = ±.010
FRACTIONS: ±1/16
ANGULAR: ±1°

NEXT ASS'Y:
FINAL ASS'Y:

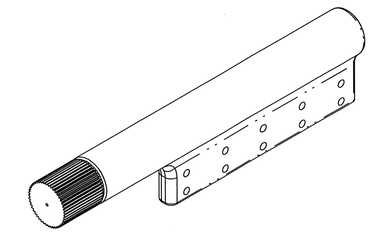

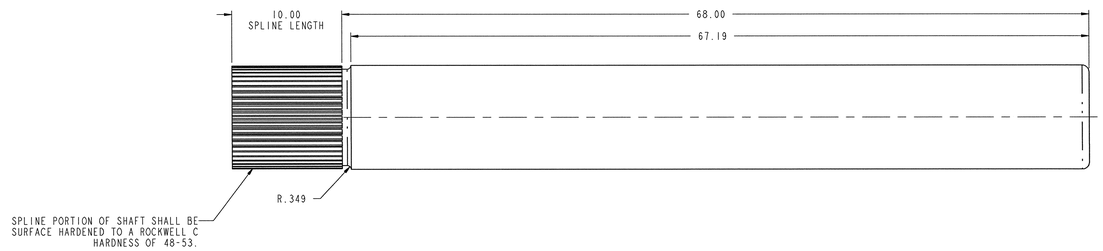

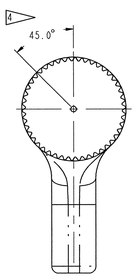

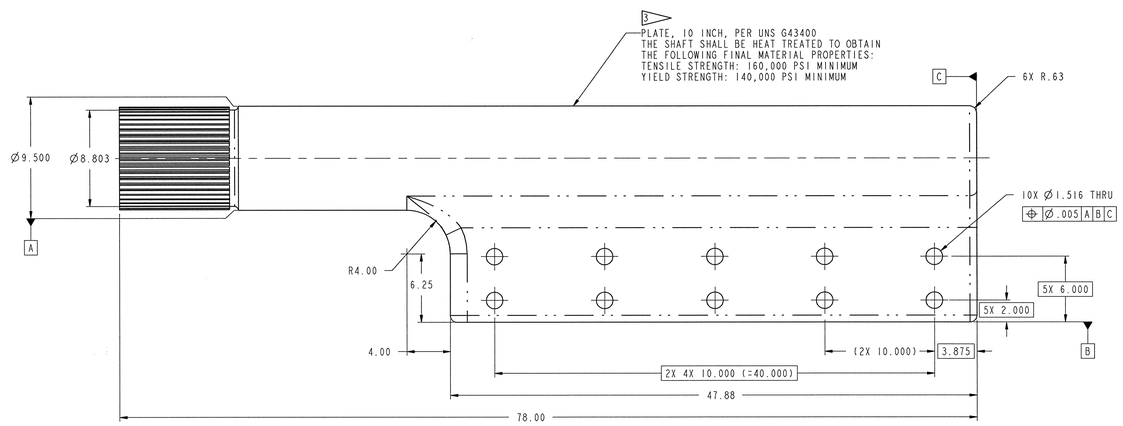

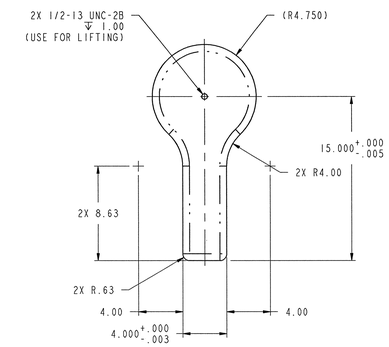

EXTERNAL INVOLUTE SPLINE DATA	
FILLET ROOT SIDE FIT, CLASS 5	
NUMBER OF TEETH	46
SPLINE PITCH	5/10
PRESSURE ANGLE	30°
BASE DIAMETER	7.967434 REF
PITCH DIAMETER	9.200000 REF
MAJOR DIAMETER	9.400
FORM DIAMETER	8.981
MINOR DIAMETER	8.803 MIN
CIRCULAR TOOTH THICKNESS	
MAX EFFECTIVE	.3142
MIN ACTUAL	.3094
MEASUREMENT BETWEEN PINS	9.7928
PIN DIAMETER	.3840
FILLET RADIUS MIN	.075

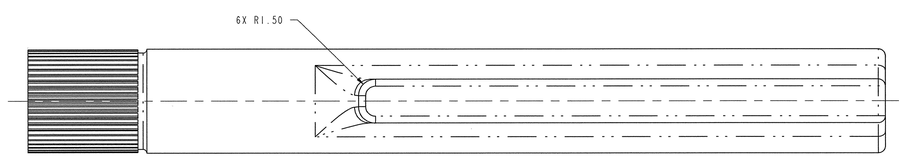

NOTES:

1. THIS COMPONENT IS SUBJECT TO THE REQUIREMENTS SET FORTH IN SECTION 15065.
2. ALL SURFACES/FEATURES EXCEPT HOLES SHALL BE FINISHED TO A 32 RMS OR BETTER.
3. FABRICATOR SHALL PERFORM A TENSILE TEST ON A SPECIMEN FROM EACH SHAFT AFTER FINAL HEAT TREAT TO VERIFY THAT THE SPECIFIED MATERIAL PROPERTIES HAVE BEEN ACHIEVED. FABRICATOR SHALL SUBMIT A TENSILE TEST REPORT TO BUYER FOR APPROVAL.
4. CENTER OF ONE SPLINE TOOTH SHALL BE LOCATED AT 45 DEGREES.
5. COMPONENT WEIGHT: 2106 LBS.

SCALE: 3/16

J3-52-35

108030700-J8E-8700-A182

Knight/Jacobs Joint Venture
701 Scarboro Road, MS 8253
Oak Ridge, TN 37830
865-241-9433
Fax 865-241-3400

MERRICK Engineers & Architects

UT-BATTELLE — Oak Ridge National Laboratory, managed by UT-Battelle, LLC, for the U.S. Dept. of Energy under contract DE-AC05-00OR22725

PROJECT NAME:
SPALLATION NEUTRON SOURCE
TARGET BUILDING
UPPER ROTATING IN-CELL
SHIELD DOOR SHAFT

REV	CHANGE TYPE	CHANGE CONTROL SYSTEM	CHANGE NUMBER	DESCRIPTION	PCD	TBO			PE	DATE	PJ	DATE	REQ	DATE	UTB	DATE	RPE	RPE NO	DATE		ST	CV	EC	EE	EM	IE	M	PD	SE	AR
0				CERTIFIED FOR CONSTRUCTION - 10/26/01					RAD	11/13/01	RAD	11/26/01				11/19/01	TBO	106873	10/26/01	-							MJK			
REV				DESCRIPTION	DSN	CHK	DEPT	DATE	PE	DATE	PJ	DATE	REQ	DATE	UTB	DATE	RPE	RPE NO	DATE		ST	CV	EC	EE	EM	IE	M	PD	SE	AR

REVISION OR ISSUE PURPOSE — REVISION APPROVALS — SQUAD CHECK

RPE — REV. 0 DATE 10/23/01

DSN		10/23/01
DRW		10/23/01
CHK		10/23/01
DEPT		
PE		11/13/01
PJ		11/26/01
REQ		
UTB		11/26/01

DRAWING APPROVALS

I	48	49	50	PLANT	BLDG	FL	SH.	OF	TYPE	CLASS
3	J	X	X	8	8700		1	1	G	U
51		52		53	WBS					REV
NC		NA		IN	1.8.3.7	J3.52.35				0

NO REPRESENTATION OR WARRANTY, EXPRESSED OR IMPLIED, IS MADE AS TO THE ACCURACY, COMPLETENESS OR USEFULNESS OF THE INFORMATION OR STATEMENTS CONTAINED IN THESE DRAWINGS, OR THAT THE USE OR DISCLOSURE OF ANY INFORMATION, APPARATUS, METHOD OR PROCESS DISCLOSED IN THESE DRAWINGS MAY NOT INFRINGE PRIVATE RIGHTS OF OTHERS. NO LIABILITY IS ASSUMED WITH RESPECT TO THE USE OF, OR FOR DAMAGES RESULTING FROM THE USE OF, ANY INFORMATION, APPARATUS, METHOD OR PROCESS DISCLOSED IN THESE DRAWINGS. DRAWINGS MADE AVAILABLE FOR INFORMATION TO BIDDER ARE NOT TO BE USED FOR OTHER PURPOSES, AND ARE TO BE RETURNED UPON REQUEST OF THE FORWARDING CONTRACTOR.

P THIS DRAWING PRODUCED ON PRO-ENGINEER

THIS DOCUMENT CONTROLLED BY
CHANGE CONTROL SYSTEM 3
ENGINEERING PROCEDURE SNS-ENG-G001