NEXT ASS'Y: FINAL ASS'Y:

GENERAL NOTES:
1) DIMENSIONS AND SYMBOLOGY ARE AMERICAN NATIONAL STANDARD UNLESS OTHERWISE SPECIFIED.
2) ROUGHNESS AVERAGE EQUALS 125 MICROINCHES UNLESS OTHERWISE SPECIFIED.
3) DIMENSIONS AND TOLERANCES ARE IN INCHES.
4) BREAK ALL SHARP EDGES.
5) TOLERANCES:
   DECIMALS: .X = ±.060
   .XX = ±.030
   .XXX = ±.010
   FRACTIONS: ±1/16
   ANGULAR: ±1°

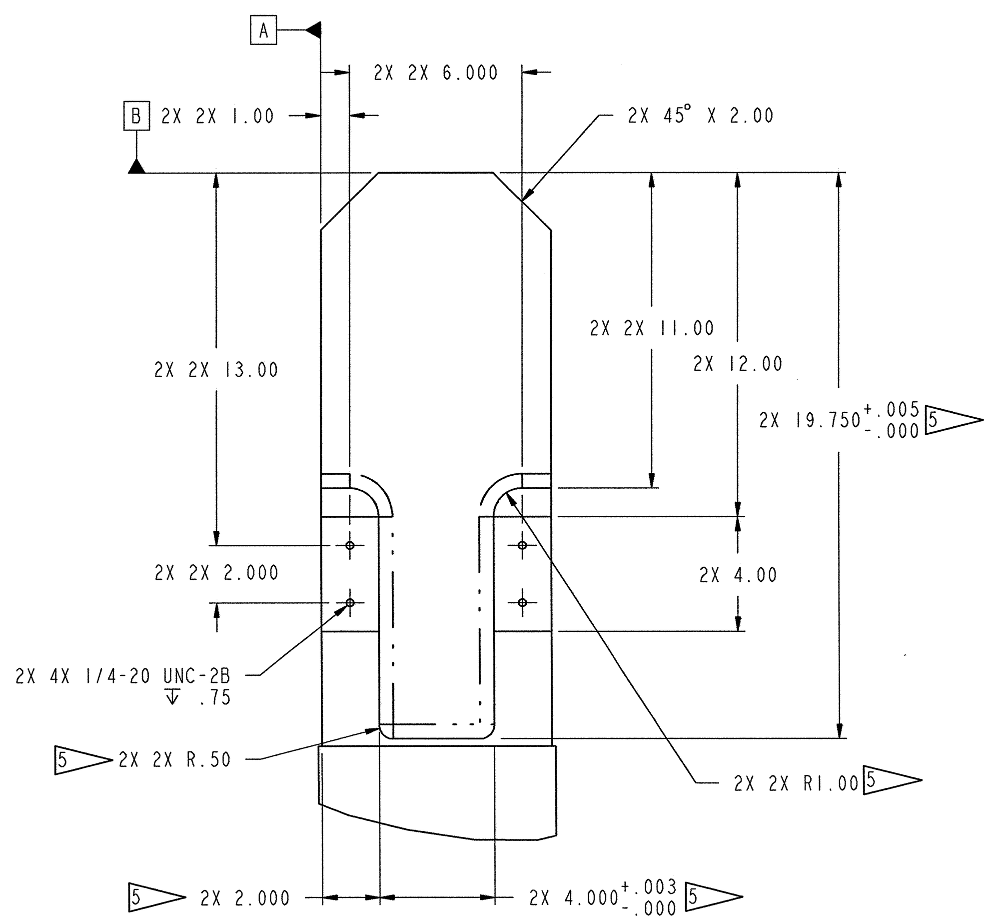

DETAIL 1
SCALE 1/4

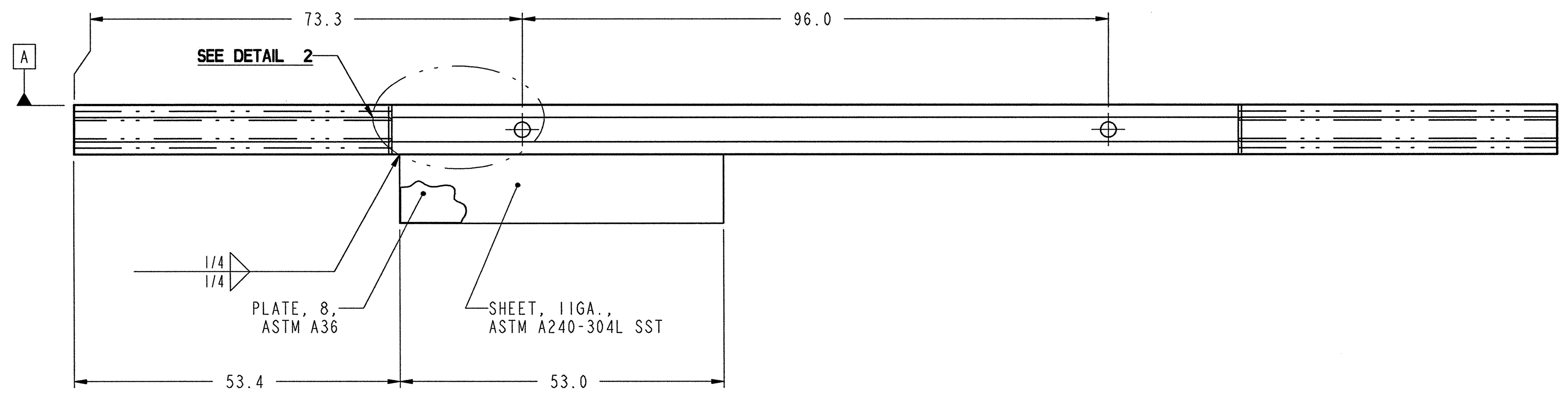

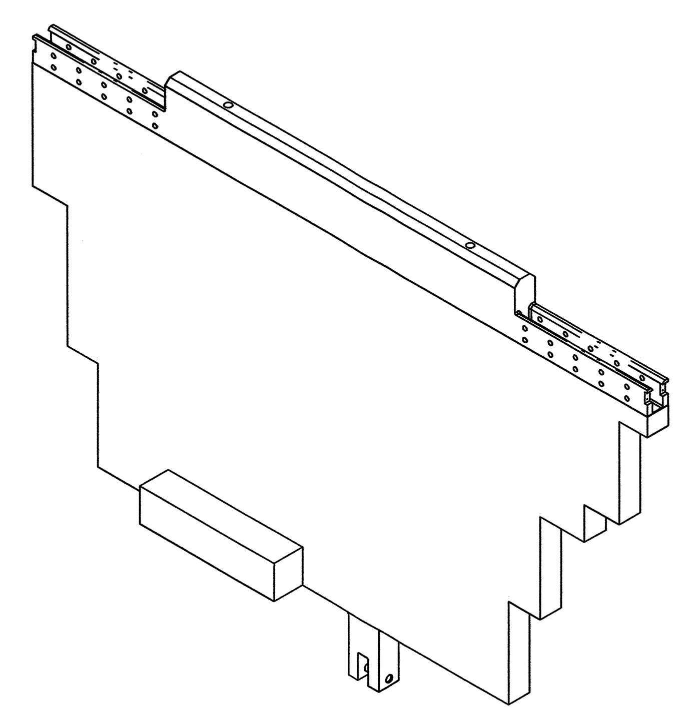

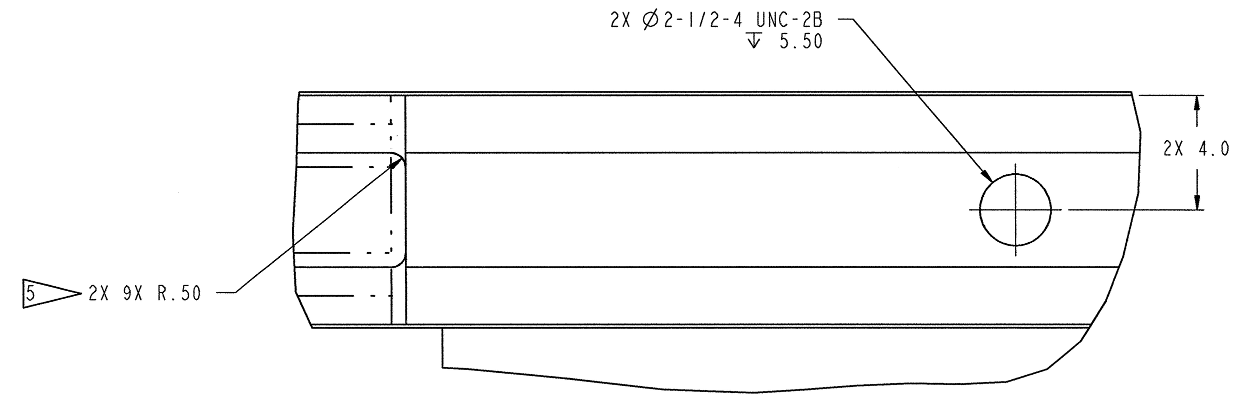

DETAIL 2
SCALE 1/4

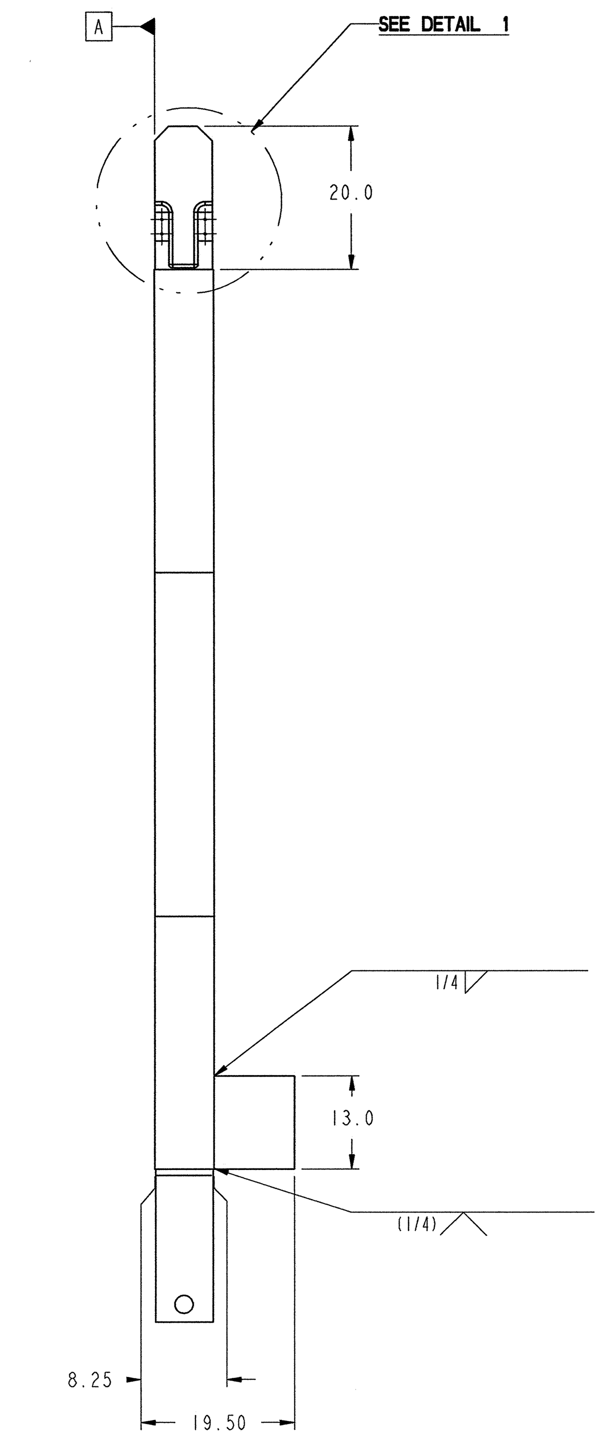

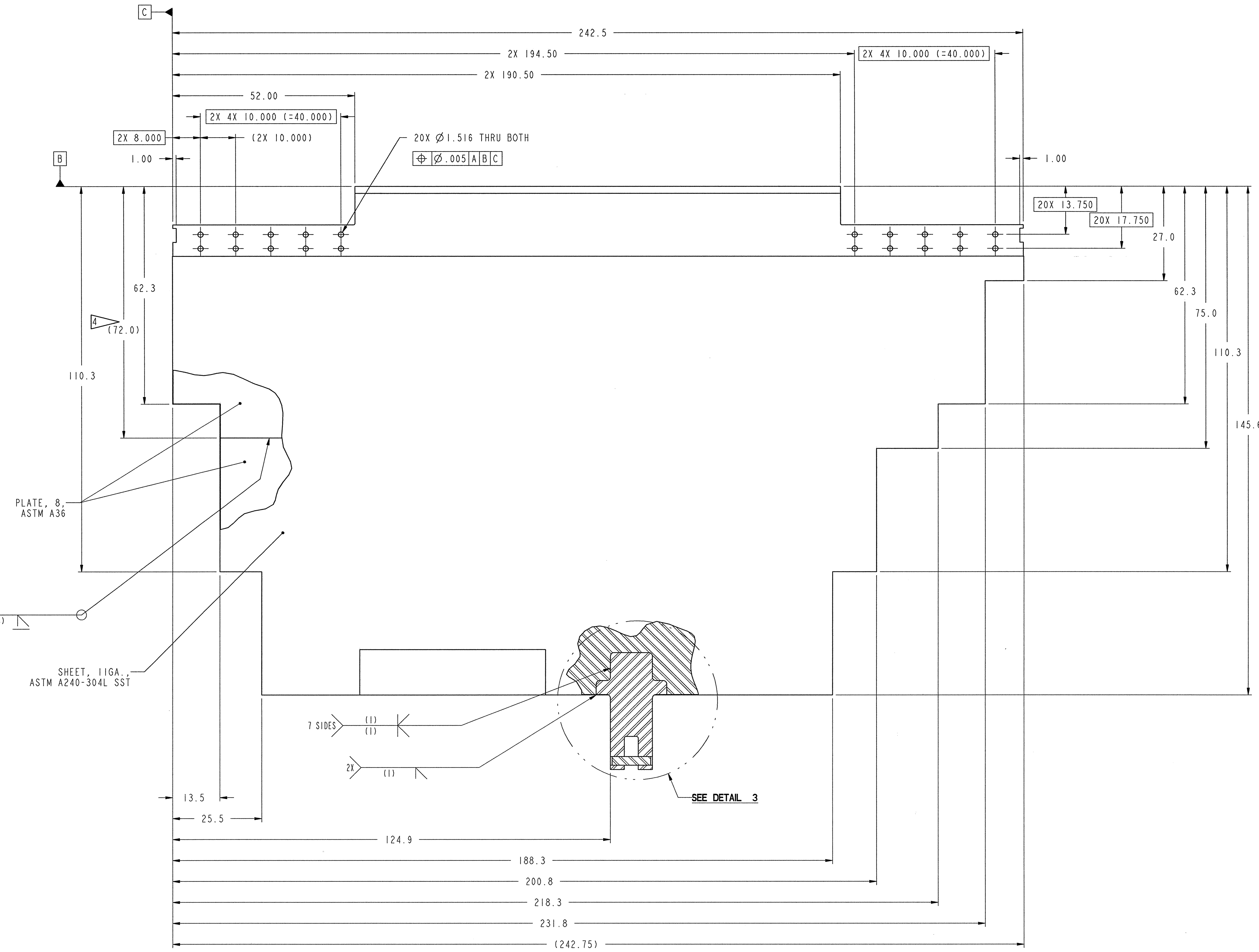

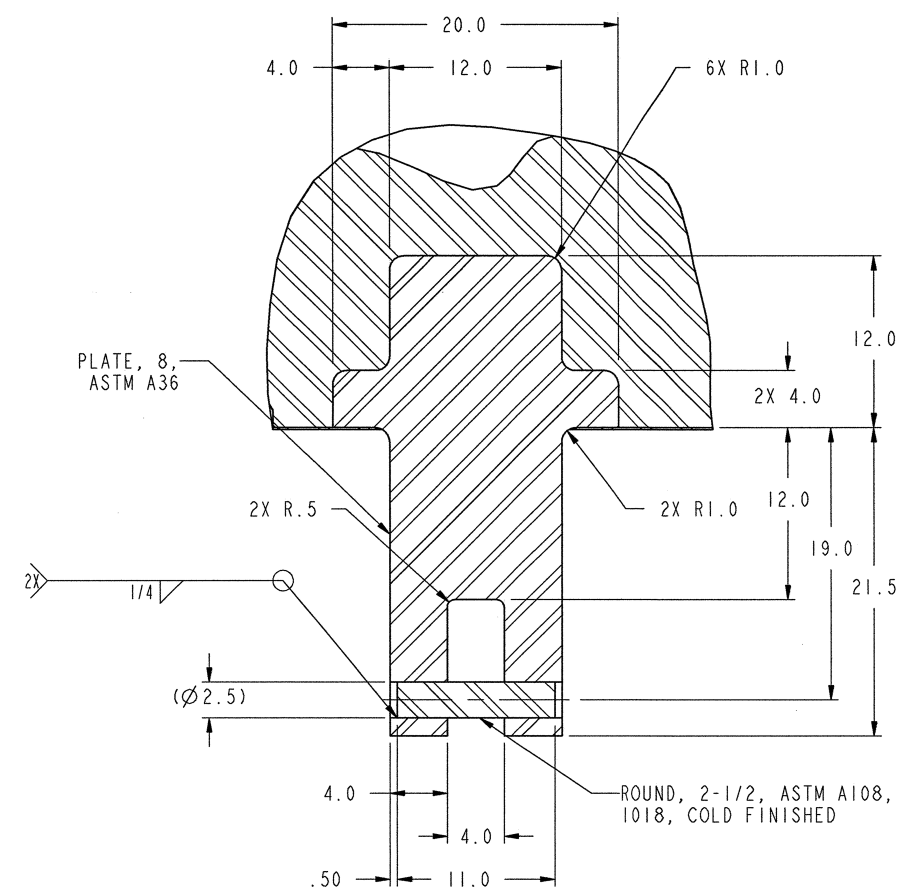

DETAIL 3
SCALE 1/8

NOTES:

1. THIS COMPONENT IS SUBJECT TO THE REQUIREMENTS SET FORTH IN SECTION 15065.
2. CLAD ALL EXPOSED CARBON STEEL SURFACES USING 11GA. 304L SST EXCEPT FOR THE TOP 20" OF DOOR. ALL SEAMS SHALL BE CONTINUOUSLY WELDED WITH ALL WELDS GROUND AND POLISHED TO A #4 FINISH. PLUG WELD 11GA. TO 8" PLATE USING 1/4" PLUG WELDS ON 24" CENTERS.
3. THE UPPER AND UN-CLADDED PORTION OF THE DOOR SHALL BE PAINTED IN ACCORDANCE WITH SECTION 09960, EXCEPT MASK THE 40 HOLES AND THE 2 4" WIDE GROOVES.
4. THE LOCATION OF HORIZONTAL WELD SEAMS ARE LEFT UP TO THE FABRICATORS DISCRETION. VERTICAL WELD SEAMS SHALL NOT BE USED TO FABRICATE THE 8" THICK PLATE DOOR.
5. INDICATED SURFACES/FEATURES SHALL BE FINISHED TO A 63 RMS OR BETTER.
6. COMPONENT WEIGHT: 68000 LBS.

SCALE: 1/16

J3-52-32

NO REPRESENTATION OR WARRANTY, EXPRESSED OR IMPLIED, IS MADE AS TO THE ACCURACY, COMPLETENESS OR USEFULNESS OF THE INFORMATION OR STATEMENTS CONTAINED IN THESE DRAWINGS, OR THAT THE USE OR DISCLOSURE OF ANY INFORMATION, APPARATUS, METHOD OR PROCESS DISCLOSED IN THESE DRAWINGS MAY NOT INFRINGE PRIVATE RIGHTS OF OTHERS. NO LIABILITY IS ASSUMED WITH RESPECT TO THE USE OF, OR FOR DAMAGES RESULTING FROM THE USE OF, ANY INFORMATION, APPARATUS, METHOD OR PROCESS DISCLOSED IN THESE DRAWINGS. DRAWINGS MADE AVAILABLE FOR INFORMATION TO BIDDER ARE NOT TO BE USED FOR OTHER PURPOSES, AND ARE TO BE RETURNED UPON REQUEST OF THE FORWARDING CONTRACTOR.

P THIS DRAWING PRODUCED ON PRO-ENGINEER

THIS DOCUMENT CONTROLLED BY
CHANGE CONTROL SYSTEM 3
ENGINEERING PROCEDURE SNS-ENG-G001

REV	CHANGE TYPE	CHANGE CONTROL SYSTEM	CHANGE REQUEST NUMBER	DESCRIPTION	DSN	CHK	DEPT	DATE	PE	DATE	PJ	DATE	REQ	DATE	UTB	DATE	RPE	RPE NO	DATE
0				CERTIFIED FOR CONSTRUCTION - 10/26/01	PCD	TBO			RJD	11/13/01	RPD	11/12/01			[signature]	11/13/01	TBO	106873	10/26/01

REVISION OR ISSUE PURPOSE — REVISION APPROVALS

SQUAD CHECK: ST CV EC EE EM IE M PD SE AR

RPE
TORJE BUAROY OSEN — REGISTERED ENGINEER — AGRICULTURE — COMMERCE — NO. 00106873 — STATE OF TENNESSEE
REV. 0 DATE 10/23/01

DSN	P. Dat	10/23/01
DRW	P. Dat	10/23/01
CHK	[signature]	10/23/01
DEPT		
PE	[signature]	11/13/01
PJ	RaDean	11/12/01
REQ		
UTB	[signature]	11/13/01

DRAWING APPROVALS

108030700-J8E-8700-A179

Knight/Jacobs Joint Venture
701 Scarboro Road, MS 8253
Oak Ridge, TN 37830
865-241-9433
fax 865-241-3400

MERRICK Engineers & Architects

UT-BATTELLE — Oak Ridge National Laboratory, managed by UT-Battelle, LLC, for the U.S. Dept. of Energy under contract DE-AC05-00OR22725

PROJECT NAME:
SPALLATION NEUTRON SOURCE

TARGET BUILDING
UPPER ROTATING IN-CELL
SHIELD DOOR WELDMENT

1	48	49	50	PLANT	BLDG	FL	SH.	OF	TYPE	CLASS
3	J	X	X	8	8700		1	1	G	U

51	52	53	WBS		REV
NC	NA	IN	1.8.3.7	J3.52.32	0