GENERAL NOTES:
1) DIMENSIONS AND SYMBOLOGY ARE AMERICAN NATIONAL STANDARD UNLESS OTHERWISE SPECIFIED.
2) ROUGHNESS AVERAGE EQUALS 125 MICROINCHES UNLESS OTHERWISE SPECIFIED.
3) DIMENSIONS AND TOLERANCES ARE IN INCHES.
4) BREAK ALL SHARP EDGES.
5) TOLERANCES:
DECIMALS: .X = ±.060
.XX = ±.030
.XXX = ±.010
FRACTIONS: ±1/16
ANGULAR: ±1°

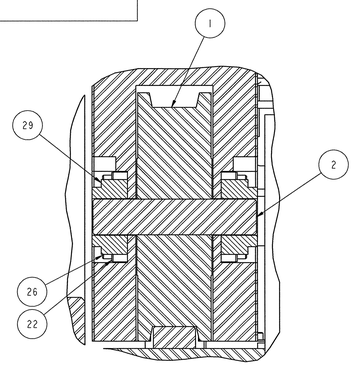

SECTION A-A
SCALE 1/4

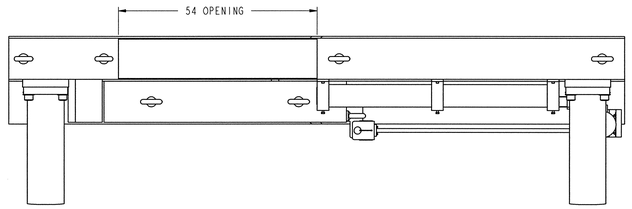

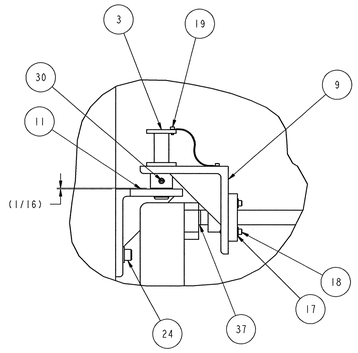

DETAIL 1
SCALE 1/4

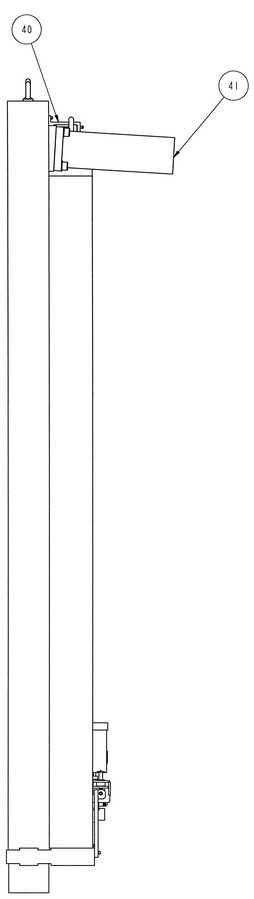

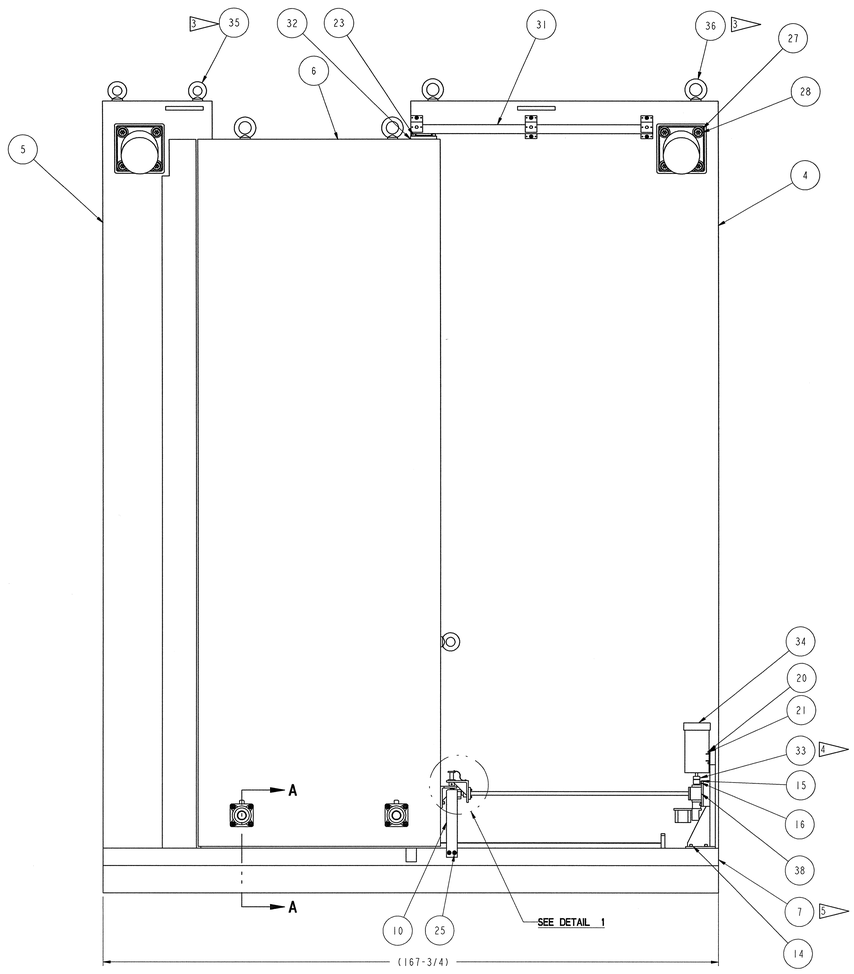

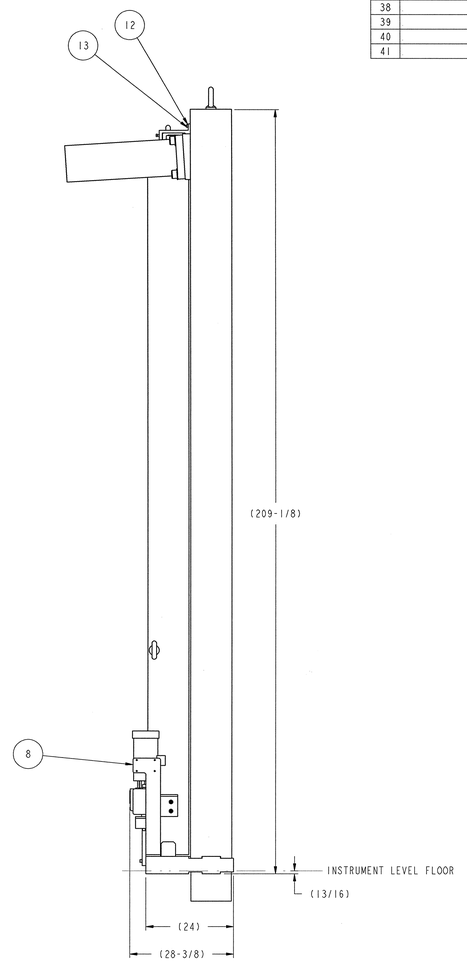

PARTS LIST

PART NO.	DRAWING NO.	DESCRIPTION	QTY
1	J3.51.31	ROLLING DOOR WHEEL DETAIL	2
2	J3.51.32	ROLLING DOOR WHEEL SHAFT	2
3	J3.51.33	ROLLING DOOR DISCONNECT PIN	1
4	J3.51.35	NORTH FIXED SHIELD PANEL WELDMENT	1
5	J3.51.36	SOUTH FIXED SHIELD PANEL WELDMENT	1
6	J3.51.37	ROLLING DOOR WELDMENT	1
7	J3.51.38	FLOOR SUPPORT WELDMENT	1
8	J3.51.39	SCREW JACK ACTUATOR BRACKET	1
9	J3.51.39	SCREW JACK CONNECTING BRACKET	1
10	J3.51.39	SCREW JACK SCREW BRACKET	1
11	J3.51.39	SCREW JACK SLIDING DOOR BRACKET	1
12		WASHER, PLAIN, TYPE A, NARROW, 7/16, ASTM F436 TYPE 1	6
13		SHCS, 7/16-14 UNC X 1-1/2 LG., ASTM A574	6
14		WASHER, PLAIN, TYPE A, NARROW, 1/2, ASTM F436 TYPE 1	10
15		WASHER, PLAIN, TYPE A, NARROW, 3/8, ASTM F436 TYPE 1	4
16		SHCS, 3/8-16 UNC X 1-1/4 LG., ASTM A574	4
17		WASHER, PLAIN, TYPE A, NARROW, 1/4, ASTM F436 TYPE 1	4
18		SHCS, 1/4-20 UNC X 1-1/4 LG., ASTM A574	4
19		SHCS, #8-32 UNC X 3/8 LG., ASTM A574	2
20		WASHER, PLAIN, TYPE A, NARROW, 5/16, ASTM F436 TYPE 1	4
21		SHCS, 5/16-18 UNC X 5/8 LG., ASTM A574	4
22		WASHER, PLAIN, TYPE A, NARROW, 5/8, ASTM F436 TYPE 1	20
23		SHCS, 5/8-11 UNC X 1-3/4 LG., ASTM A574	4
24		SHCS, 1/2-13 UNC X 1-1/2 LG., ASTM A574	8
25		SHCS, 1/2-13 UNC X 2 LG., ASTM A574	2
26		SHCS, 5/8-11 UNC X 1-1/2 LG., ASTM A574	16
27		WASHER, PLAIN, TYPE A, NARROW, 1-1/2, ASTM F436 TYPE 1	8
28		SHCS, 1-1/2-6 UNC X 6 LG., ASTM A574	8
29		4-BOLT FLANGE BEARING, UNISPHERE 11, DODGE P/N: 048041	4
30		BALL PLUNGER, CARR LANE P/N: CL-60-BP-1	1
31		BEARING RAIL, 65-7/8" LONG, PACIFIC BEARIN P/N: HVR-4	1
32		COMBINED BEARING W/ PLT, PACIFIC BEARING P/N: HVB-061/HVP4	1
33		COUPLING, JAW TYPE, SEE NOTE 4 FOR ORDERING INSTRUCTIONS	1
34		ELECTRIC MOTOR, 1HP, 3 PHASE, 1725 RPM, TEFC, LEESON P/N: 114146	1
35		EYE BOLT, McMASTER CARR P/N: 3014T58	3
36		EYE BOLT, McMASTER CARR P/N: 3014T61	4
37		FLANGED BEARING, McMASTER CARR P/N: 59575K34	1
38		MACHINE SCR JACK, NOOK P/N: 2MSJ-U6:1/X05-2/4CE-1C/FA/65-15/16/S	1
39		NYLON COATED LANYARD, McMASTER CARR P/N: 90312A11	1
40		RAIL CLAMP FLANGE, PACIFIC BEARING P/N: HVC-4	3
41		SHOCK ABSORBER, PER DATA SHEET SA-3012	2

NOTES:

1. SEE J7 SERIES DRAWINGS FOR LOWER IN-CELL SHIELD DOOR INSTALLATION DETAILS.
2. THIS COMPONENT IS SUBJECT TO THE REQUIREMENTS SET FORTH IN SECTION 15065.
3. REMOVE EYE BOLTS ON TOP OF DOORS AFTER INSTALLATION. PLUG TAPPED HOLES WITH SAME SIZE SET SCREWS.
4. COMPLETE ORDERING INFORMATION FOR THE JAW COUPLING IS AS FOLLOWS: JAW COUPLING, L075 1/2 X 5/8, LOVEJOY CATALOG NO'S: 10685, 10688, 10620 WITH KEYS.
5. THE FLOOR SUPPORT WELDMENT IS SHOWN AS PART OF THIS SUB-ASSEMBLY FOR CLARITY. THE FLOOR SUPPORT WELDMENT WILL BE EMBEDDED IN THE FLOOR OF HOTCELL AT THE SAME TIME THE INSTRUMENT FLOOR IS POURED. THE LOWER DOOR FABRICATOR MAY OR MAY NOT BE RESPONSIBLE FOR THE FABRICATION OF THE FLOOR SUPPORT. THE FLOOR SUPPORT WILL BE PROCURED WITH THE TARGET BUILDING SUBSTRUCTURES PACKAGE.
6. 1-1/2 SHCS SHALL BE TIGHTENED TO 750 FT-LBF TORQUE (DRY).
7. 5/8 SHCS SHALL BE TIGHTENED TO 120 FT-LBF TORQUE (DRY).
8. 1/2 SHCS SHALL BE TIGHTENED TO 80 FT-LBF TORQUE (DRY).

SCALE: 1/16

108030700-J8E-8700-A065

Knight/Jacobs Joint Venture
701 Scarboro Road, MS 8253
Oak Ridge, TN 37830
865-241-9433
fax 865-241-3400

MERRICK Engineers & Architects

UT-BATTELLE — Oak Ridge National Laboratory, managed by UT-Battelle, LLC, for the U.S. Dept. of Energy under contract DE-AC05-00OR22725

PROJECT NAME:
SPALLATION NEUTRON SOURCE
TARGET BUILDING
LOWER IN-CELL SHIELD DOOR SUBASSEMBLY

I	49	50	PLANT	BLDG	FL	SH.	OF	TYPE	CLASS
3	J	X	8	8700		1	1	G	U

51	52	53	WBS		REV
NC	NA	IN	1.8.3.7	J3.51.30	0

J3-51-30

REV	CHANGE TYPE	CHANGE CONTROL SYSTEM	CHANGE NUMBER	DESCRIPTION	PCD	TBO			PE	DATE	PJ	DATE	REQ	DATE	UTB	DATE	RPE	RPE NO	DATE		ST	CV	EC	EE	EM	IE	M	PD	SE	AR
0				CERTIFIED FOR CONSTRUCTION - 10/26/01		TBO				11/26/01	RAD	11/26/01				11/29/01	TBO	106873	10/26/01											
REV	CHANGE TYPE	CHANGE CONTROL SYSTEM	CHANGE NUMBER	DESCRIPTION	DSN	CHK	DEPT	DATE	PE	DATE	PJ	DATE	REQ	DATE	UTB	DATE	RPE	RPE NO	DATE		ST	CV	EC	EE	EM	IE	M	PD	SE	AR

REVISION OR ISSUE PURPOSE — REVISION APPROVALS — SQUAD CHECK

RPE — KARLIE BIARDY'S STAMP — REV. 0 DATE 10/26/01

DRAWING APPROVALS

DSN	P. Davis	10/26/01
DRW	P. Davis	10/26/01
CHK	T. Ha	10/26/01
DEPT		
PE	T. Jensen	11/13/01
PJ	R. A. Dean	11/26/01
REQ		
UTB	M. Jensen	11/26/01

NO REPRESENTATION OR WARRANTY, EXPRESSED OR IMPLIED, IS MADE AS TO THE ACCURACY, COMPLETENESS OR USEFULNESS OF THE INFORMATION OR STATEMENTS CONTAINED IN THESE DRAWINGS, OR THAT THE USE OR DISCLOSURE OF ANY INFORMATION, APPARATUS, METHOD OR PROCESS DISCLOSED IN THESE DRAWINGS MAY NOT INFRINGE PRIVATE RIGHTS OF OTHERS. NO LIABILITY IS ASSUMED WITH RESPECT TO THE USE OF, OR FOR DAMAGES RESULTING FROM THE USE OF, ANY INFORMATION, APPARATUS, METHOD OR PROCESS DISCLOSED IN THESE DRAWINGS. DRAWINGS MADE AVAILABLE FOR INFORMATION TO BIDDER ARE NOT TO BE USED FOR OTHER PURPOSES, AND ARE TO BE RETURNED UPON REQUEST OF THE FORWARDING CONTRACTOR.

P THIS DRAWING PRODUCED ON PRO-ENGINEER

THIS DOCUMENT CONTROLLED BY
CHANGE CONTROL SYSTEM 3
ENGINEERING PROCEDURE SNS-ENG-G001