GENERAL NOTES:
1) DIMENSIONS AND SYMBOLOGY ARE AMERICAN NATIONAL STANDARD UNLESS OTHERWISE SPECIFIED.
2) ROUGHNESS AVERAGE EQUALS 125 MICROINCHES UNLESS OTHERWISE SPECIFIED.
3) DIMENSIONS AND TOLERANCES ARE IN INCHES.
4) BREAK ALL SHARP EDGES.
5) TOLERANCES:
DECIMALS: .X = ±.060
.XX = ±.030
.XXX = ±.010
FRACTIONS: ±1/16
ANGULAR: ±1°

NEXT ASS'Y:

FINAL ASS'Y:

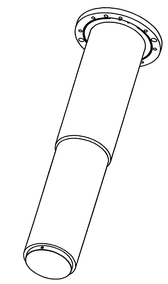

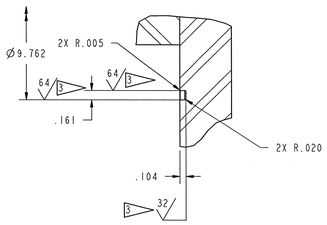

DETAIL 1
SCALE 1/1

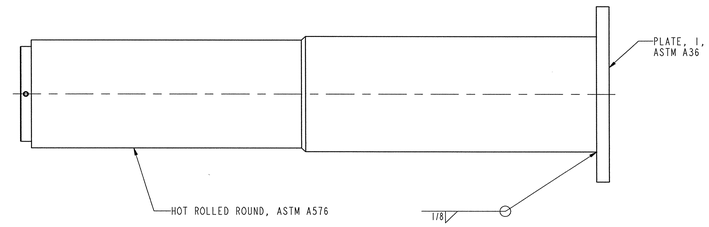

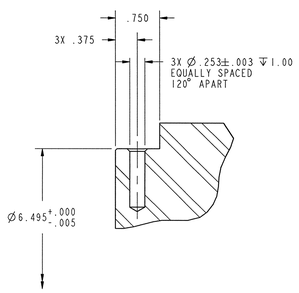

DETAIL 2
SCALE 1/1

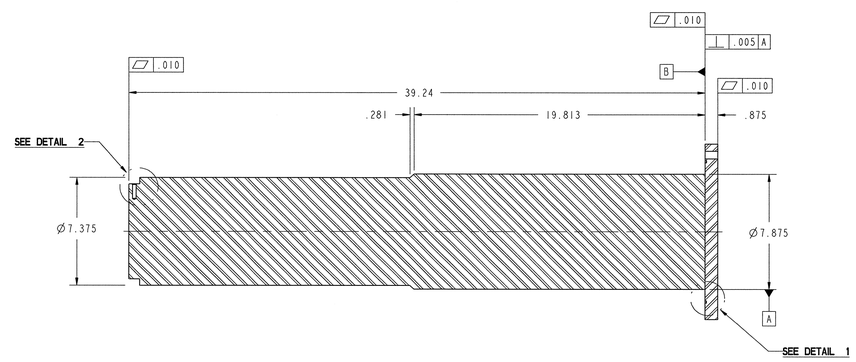

SECTION A-A

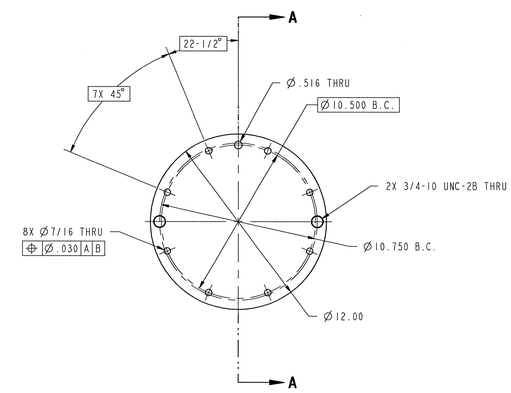

NOTES:

1. THIS COMPONENT IS SUBJECT TO THE REQUIREMENTS SET FORTH IN SECTION 15065.
2. PAINTING OF CARBON STEEL COMPONENTS.
   REMOVE VISIBLE RUST, MILL SCALE, PAINT, AND FOREIGN MATTER FROM ALL CARBON STEEL SURFACES BY BLAST CLEANING, BY WHEEL, OR NOZZLE (DRY OR WET) USING SAND, GRIT, OR SHOT. AFTER SURFACE PREPARTATION PRIME THE SURFACE WITH PITTSBURG PAINTS FAST DRY 35 PRIMER 95-900 SERIES, OR EQUAL. THE SECOND COAT COLOR SHOULD BE BLACK PITTSBURG PAINTS FAST DRY 35 ENAMEL 95-900 SERIES OR EQUAL.

3 MASK THE INDICATED O-RING SEALING SURFACES.

SCALE: 1/4

108030700-J8E-8700-A301

Knight/Jacobs Joint Venture
701 Scarboro Road, MS 8253
Oak Ridge, TN 37830
865-241-9433
fax 865-241-3400

MERRICK Engineers & Architects

UT-BATTELLE
Oak Ridge National Laboratory, managed by UT-Battelle, LLC, for the U.S. Dept. of Energy under contract DE-AC05-00OR22725

PROJECT NAME:
SPALLATION NEUTRON SOURCE
TARGET BUILDING
SPARE REMOVABLE
PENETRATION WELDMENT

1	48	49	50	PLANT	BLDG	FL	SH.	OF	TYPE	CLASS
3	J	X	X	8	8700		1	1	G	U
51		52		53	WBS					REV
NC		NA		IN	1.8.3.7		J3.47.31			0

REV	CHANGE ORDER	CHANGE CONTROL	CHANGE MODIFY	DESCRIPTION	PCD	TBO																							
0				CERTIFIED FOR CONSTRUCTION - 10/26/01																									
					DSN	CHK	DEPT	DATE	PE	DATE	PJ	DATE	REQ	DATE	UTB	DATE	RPE	RPE NO	DATE	ST	CV	EC	EE	EM	IE	M	PD	SE	AR
									RDD	11/13/01	RAP	11/12/01			OMH	11/12/01	TBO	106873	10/26/01										

REVISION OR ISSUE PURPOSE — REVISION APPROVALS — SQUAD CHECK

RPE
REV. 0 DATE 10/23/01

DSN		10/26/01
DRW		10/26/01
CHK		10/26/01
DEPT		
PE		11/13/01
PJ		11/12/01
REQ		
UTB		11/12/01

DRAWING APPROVALS

NO REPRESENTATION OR WARRANTY, EXPRESSED OR IMPLIED, IS MADE AS TO THE ACCURACY, COMPLETENESS OR USEFULNESS OF THE INFORMATION OR STATEMENTS CONTAINED IN THESE DRAWINGS, OR THAT THE USE OR DISCLOSURE OF ANY INFORMATION, APPARATUS, METHOD OR PROCESS DISCLOSED IN THESE DRAWINGS MAY NOT INFRINGE PRIVATE RIGHTS OF OTHERS. NO LIABILITY IS ASSUMED WITH RESPECT TO THE USE OF, OR FOR DAMAGES RESULTING FROM THE USE OF, ANY INFORMATION, APPARATUS, METHOD OR PROCESS DISCLOSED IN THESE DRAWINGS. DRAWINGS MADE AVAILABLE FOR INFORMATION TO BIDDER ARE NOT TO BE USED FOR OTHER PURPOSES, AND ARE TO BE RETURNED UPON REQUEST OF THE FORWARDING CONTRACTOR.

P THIS DRAWING PRODUCED ON PRO-ENGINEER

THIS DOCUMENT CONTROLLED BY
CHANGE CONTROL SYSTEM 3
ENGINEERING PROCEDURE SNS-ENG-G001