GENERAL NOTES:
1) DIMENSIONS AND SYMBOLOGY ARE AMERICAN NATIONAL STANDARD UNLESS OTHERWISE SPECIFIED.
2) ROUGHNESS AVERAGE EQUALS 125 MICROINCHES UNLESS OTHERWISE SPECIFIED.
3) DIMENSIONS AND TOLERANCES ARE IN INCHES.
4) BREAK ALL SHARP EDGES.
5) TOLERANCES:
DECIMALS: .X = ±.060
.XX = ±.030
.XXX = ±.010
FRACTIONS: ±1/16
ANGULAR: ±1°

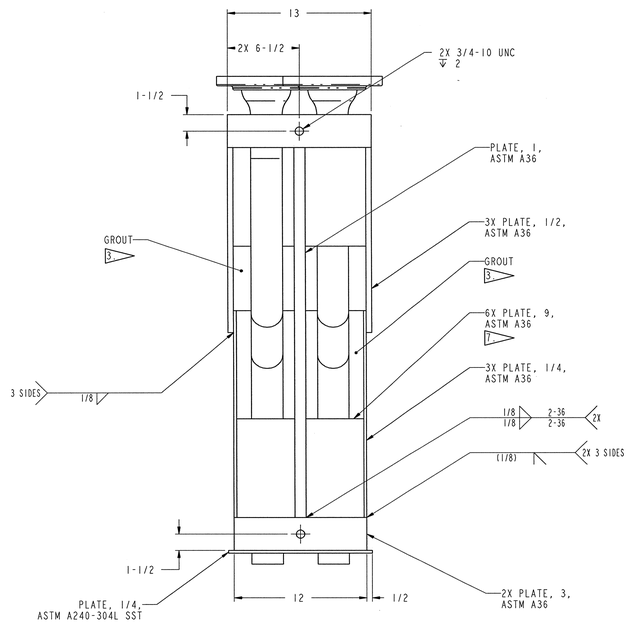

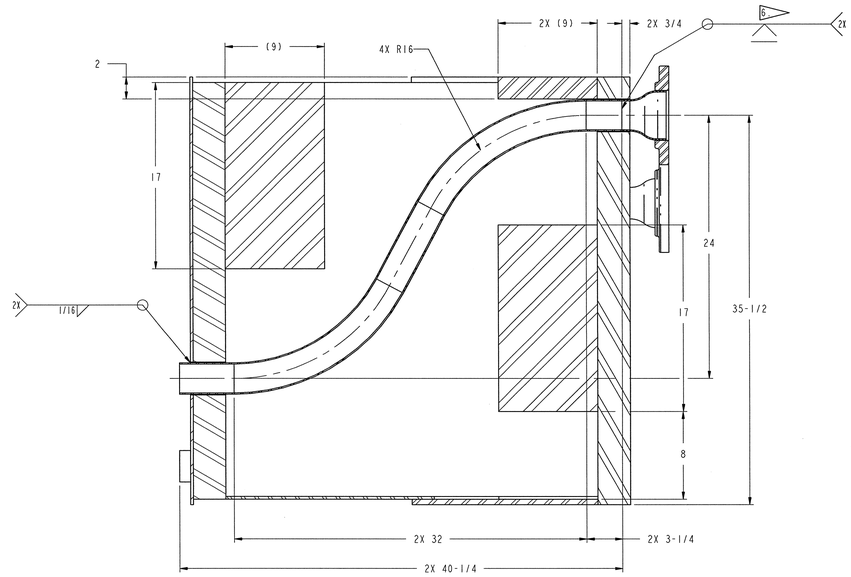

SECTION A-A

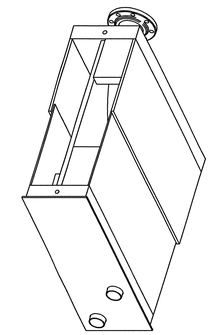

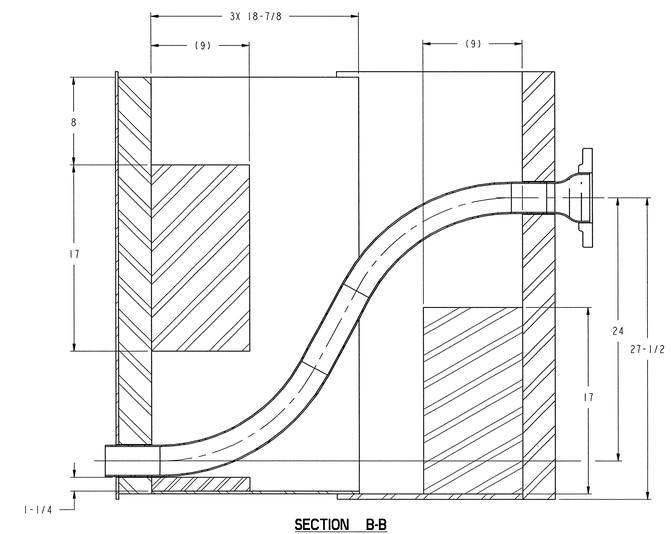

SECTION B-B

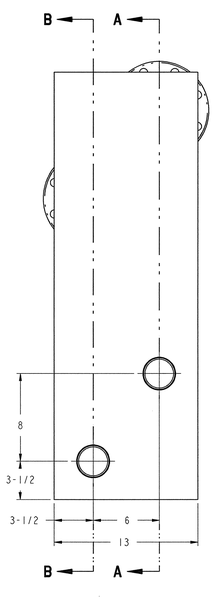

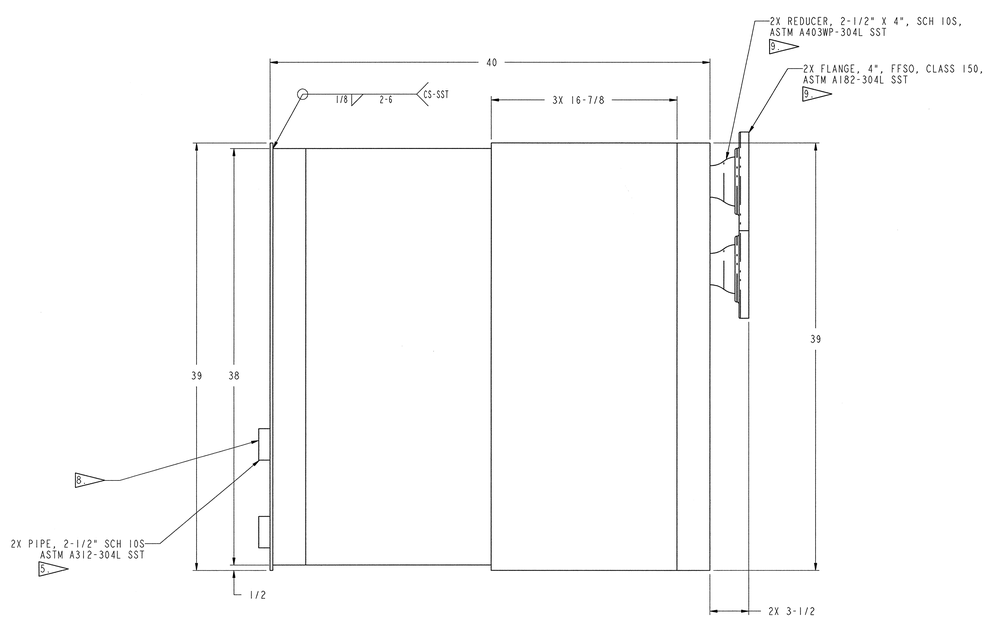

NOTES:

1. THIS COMPONENT IS SUBJECT TO THE REQUIREMENTS SET FORTH IN SECTION 15065.
2. PRIME AND PAINT ALL EXPOSED CARBON STEEL IN ACCORDANCE WITH SECTION 09960.
3. FILL INDICATED CAVITIES USING HEAVY WEIGHT GROUT AND 3/16 STEEL AGGREGATE PER SECTION 03300.
4. WRAP THE AREA OF THE 2-1/2 INCH PIPE THAT WILL BE IN CONTACT WITH GROUT USING 3M SCOTCHWRAP 51 CORROSION PROTECTION TAPE. FOLLOW MANUFACTURES RECOMMENDATIONS FOR SURFACE PREPARATION, PRIMING AND TAPE APPLICATION.
5. THE 40-1/4" LONG (FINISHED LENGTH) 2-1/2 DIAMETER PIPE SHALL BE BENT FROM A SINGLE CONTINUOUS PIPE. THE PIPE SHALL BE ROUND WITHIN 1/16" AFTER BENDING.
6. GRIND AND POLISH INTERIOR OF THE REDUCER TO PIPE WELD TO A 150 GRIT FINISH.
7. TACK WELD PLATES IN PLACE PRIOR TO FILLING CAVITIES WITH GROUT.
8. DEBURR AND GRIND SHARP EDGES ON END OF PIPE.
9. ONE OF THE REQUIRED 1 X 2 PENETRATION BANKS SHALL BE FABRICATED WITH THE FOLLOWING MODIFICATIONS: THE REDUCERS AND FLANGES SHALL SHALL BE OMITTED. EXTEND THE 3-1/4" STRAIGHT PIPE TANGENT TO 7" SO THAT EACH PIPE PROTRUDES 3" OUT FROM THE 3" PLATE.
10. COMPONENT WEIGHT: 4234 LBS.

SCALE: 3/16

108030700-J8E-8700-A291

Knight/Jacobs Joint Venture
701 Scarboro Road, MS 8253
Oak Ridge, TN 37830
865-241-9433
fax 865-241-3400

MERRICK Engineers & Architects

UT-BATTELLE — Oak Ridge National Laboratory, managed by UT-Battelle, LLC, for the U.S. Dept. of Energy under contract DE-AC05-00OR22725

PROJECT NAME: SPALLATION NEUTRON SOURCE

TARGET BUILDING
1X2 PENETRATION BANK

1	48	49	50	PLANT	BLDG	FL	SH.	OF	TYPE	CLASS
3	J	X	X	8	8700		1	1	G	U

S1	S2	S3	WBS		REV
NC	NA	IN	1.8.3.7	J3.45.31	0

REV	"PRPE"	CHANGE SYSTEM	CHANGE NUMBER	DESCRIPTION	PCD	TBO																															
0				CERTIFIED FOR CONSTRUCTION - 10/26/01		TBO				(RD)	11/26/01	RPD	11/26/01						11/26/01	TBO	106873	10/26/01														
REV	"PRPE"	CHANGE SYSTEM	CHANGE NUMBER	DESCRIPTION	DSN	CHK	DEPT	DATE	PE	DATE	PJ	DATE	REQ	DATE	UTB	DATE	RPE	RPE NO	DATE	ST	CV	EC	EE	EM	IE	M	PD	SE	AR

REVISION OR ISSUE PURPOSE — REVISION APPROVALS — SQUAD CHECK

RPE — REV. 0 DATE 10/26/01

DSN	P. Dod	10/26/01
DRW	P. Dod	10/26/01
CHK	T. Cole	11/26/01
DEPT		
PE	A. Gaven	11/26/01
PJ	R. Kathean	11/26/01
REQ		
UTB	M. Gaven	11/26/01

DRAWING APPROVALS

NO REPRESENTATION OR WARRANTY, EXPRESSED OR IMPLIED, IS MADE AS TO THE ACCURACY, COMPLETENESS OR USEFULNESS OF THE INFORMATION OR STATEMENTS CONTAINED IN THESE DRAWINGS, OR THAT THE USE OR DISCLOSURE OF ANY INFORMATION, APPARATUS, METHOD OR PROCESS DISCLOSED IN THESE DRAWINGS MAY NOT INFRINGE PRIVATE RIGHTS OF OTHERS. NO LIABILITY IS ASSUMED WITH RESPECT TO THE USE OF, OR FOR DAMAGES RESULTING FROM THE USE OF, ANY INFORMATION, APPARATUS, METHOD OR PROCESS DISCLOSED IN THESE DRAWINGS. DRAWINGS MADE AVAILABLE FOR INFORMATION TO BIDDER ARE NOT TO BE USED FOR OTHER PURPOSES, AND ARE TO BE RETURNED UPON REQUEST OF THE FORWARDING CONTRACTOR.

P THIS DRAWING PRODUCED ON PRO-ENGINEER

THIS DOCUMENT CONTROLLED BY
CHANGE CONTROL SYSTEM 3
ENGINEERING PROCEDURE SNS-ENG-G001