NEXT ASS'Y: | FINAL ASS'Y:

PARTS LIST

PART NO.	DRAWING NO.	DESCRIPTION	QTY
1	J3.28.32	HEPA FILTER COVER WELDMENT-1	1
2	J3.28.33	HEPA FILTER LIFTING BAIL	2
3	J3.29.31	2000 CFM HEPA FILTER WELDMENT	1
4		GASKET, 14 OD X 12-1/2 ID X 1/4 T, 40-50 DURO, NEOPRENE	1
5		HEPA FILTER, FLANDERS P/N: 0-007-W-03-03-NU-12-23-GG-FU5	2
6		RIVET, 3/16 X 1/4 LG., SST	8

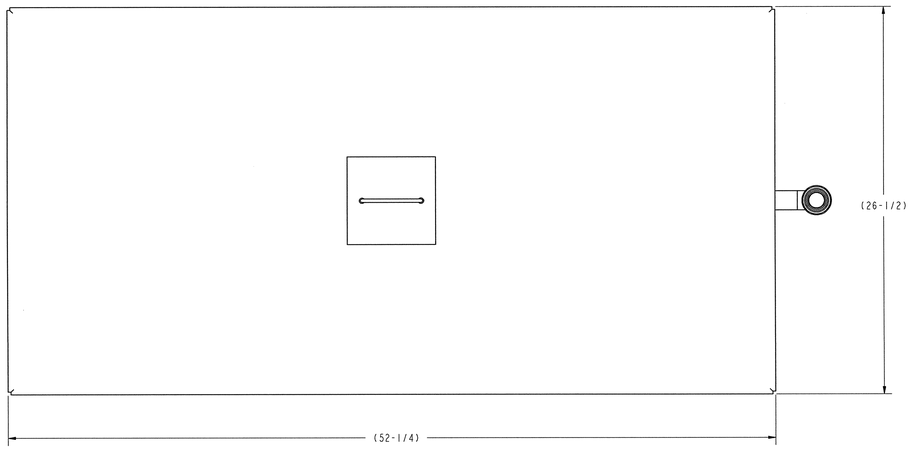

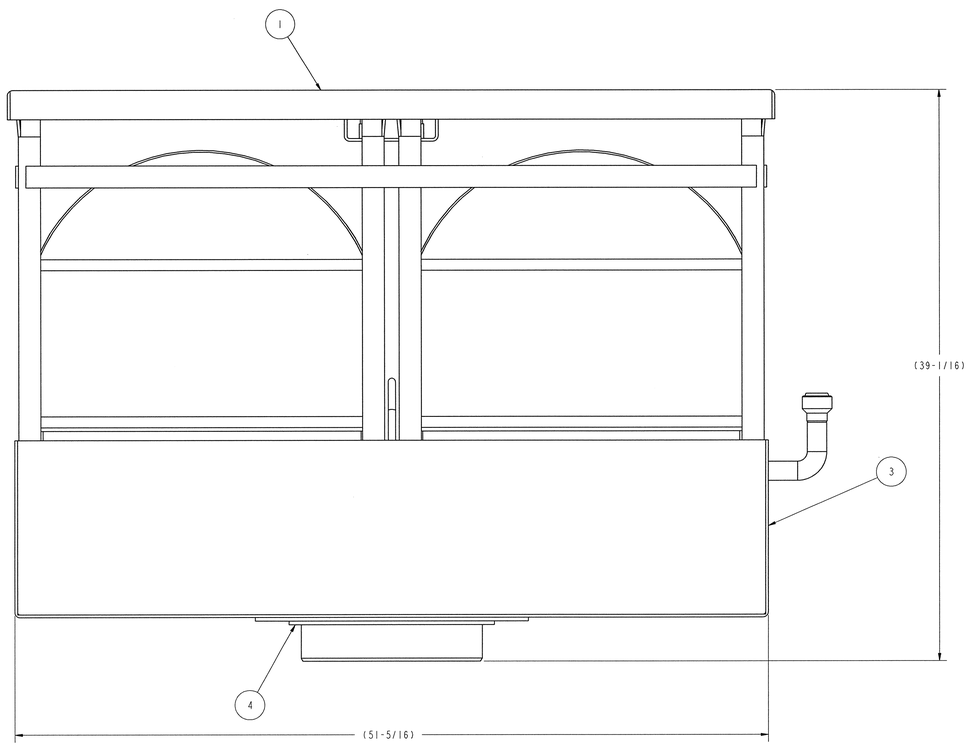

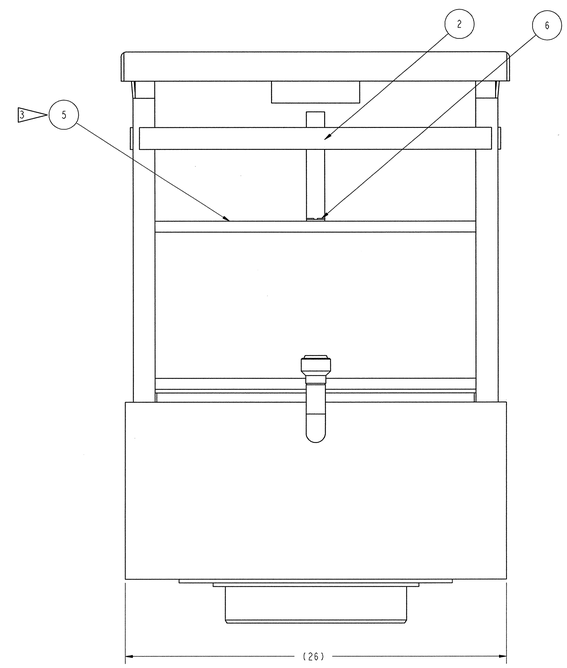

NOTES:

1. THIS COMPONENT IS SUBJECT TO THE REQUIREMENTS SET FORTH IN SECTION 15065.
2. GASKET SHALL BE ADHERED TO THE SST FLANGE USING LOCTITE DURABOND E-40FL EPOXY.
3. HEPA FILTERS SHALL BE PURCHASED FROM THE ORNL STORES.
4. COMPONENT TAG NUMBER: FLTR-2207

SCALE: 1/4

J3-29-30

108030700-J8E-8700-A046

Knight/Jacobs Joint Venture
701 Scarboro Road, MS 8253
Oak Ridge, TN 37830
865-241-9433
fax 865-241-3400

MERRICK Engineers & Architects

UT-BATTELLE — Oak Ridge National Laboratory, managed by UT-Battelle, LLC, for the U.S. Dept. of Energy under contract DE-AC05-00OR22725

PROJECT NAME:
SPALLATION NEUTRON SOURCE

TARGET BUILDING 2000 CFM HEPA FILTER ASSEMBLY

1	48	49	50	PLANT	BLDG	FL	SH.	OF	TYPE	CLASS
3	J	X	X	8	8700		1	1	G	U

51	52	53	WBS		REV
NC	NA	IN	1.8.3.7	J3.29.30	0

REV	CHANGE TYPE	CHANGE CONTROL SYSTEM	CHANGE REQUEST NUMBER	DESCRIPTION	DSN	CHK	DEPT	DATE	PE	DATE	PJ	DATE	REQ	DATE	UTB	DATE	RPE	RPE NO	DATE	ST	CV	EC	EE	EM	IE	M	PD	SE	AR
0				CERTIFIED FOR CONSTRUCTION - 10/26/01	PCD	TBO				11/13/01		11/12/01				11/13/01	TBO	106873	10/26/01										

REVISION OR ISSUE PURPOSE — REVISION APPROVALS — SQUAD CHECK

RPE — TORIE BUAROY OSEN, REGISTERED ENGINEER, STATE OF TENNESSEE, NO. 00106873

DSN	P. D.	10/23/01
DRW	P. D.	10/23/01
CHK	T.	10/23/01
DEPT		
PE		11/13/01
PJ	R A Dean	11/12/01
REQ		
UTB		11/13/01

REV. 0 DATE 10/23/01 — DRAWING APPROVALS

NO REPRESENTATION OR WARRANTY, EXPRESSED OR IMPLIED, IS MADE AS TO THE ACCURACY, COMPLETENESS OR USEFULNESS OF THE INFORMATION OR STATEMENTS CONTAINED IN THESE DRAWINGS, OR THAT THE USE OR DISCLOSURE OF ANY INFORMATION, APPARATUS, METHOD OR PROCESS DISCLOSED IN THESE DRAWINGS MAY NOT INFRINGE PRIVATE RIGHTS OF OTHERS. NO LIABILITY IS ASSUMED WITH RESPECT TO THE USE OF, OR FOR DAMAGES RESULTING FROM THE USE OF, ANY INFORMATION, APPARATUS, METHOD OR PROCESS DISCLOSED IN THESE DRAWINGS. DRAWINGS MADE AVAILABLE FOR INFORMATION TO BIDDER ARE NOT TO BE USED FOR OTHER PURPOSES, AND ARE TO BE RETURNED UPON REQUEST OF THE FORWARDING CONTRACTOR.

P THIS DRAWING PRODUCED ON PRO-ENGINEER

THIS DOCUMENT CONTROLLED BY CHANGE CONTROL SYSTEM 3
ENGINEERING PROCEDURE SNS-ENG-G001