GENERAL NOTES:
1) DIMENSIONS AND SYMBOLOGY ARE AMERICAN NATIONAL STANDARD UNLESS OTHERWISE SPECIFIED.
2) ROUGHNESS AVERAGE EQUALS 125 MICROINCHES UNLESS OTHERWISE SPECIFIED.
3) DIMENSIONS AND TOLERANCES ARE IN INCHES.
4) BREAK ALL SHARP EDGES.
5) TOLERANCES:
DECIMALS: .X = ±.060
.XX = ±.030
.XXX = ±.010
FRACTIONS: ±1/16
ANGULAR: ±1°

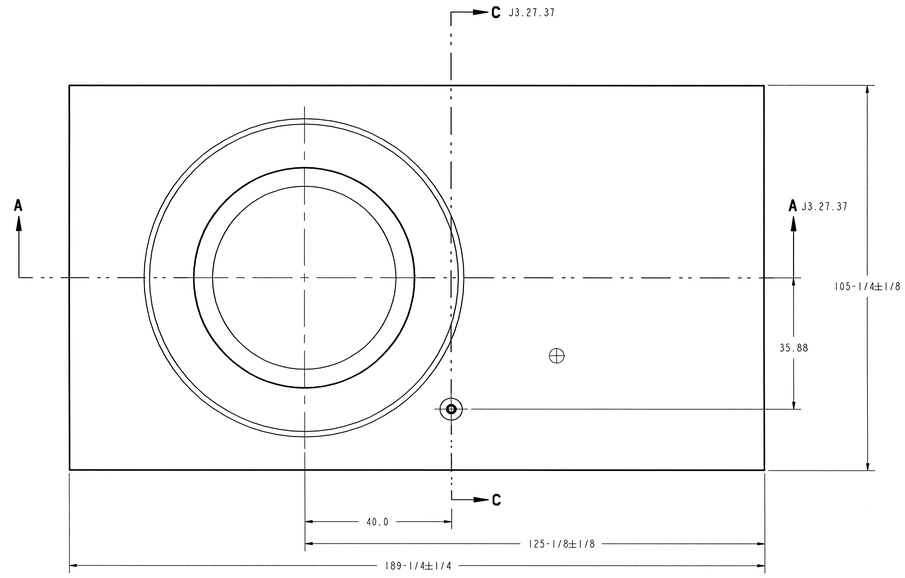

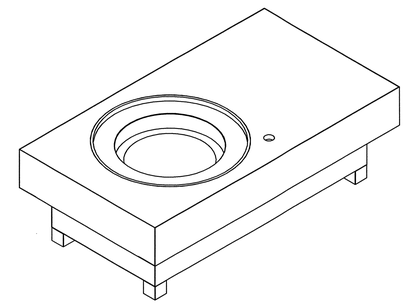

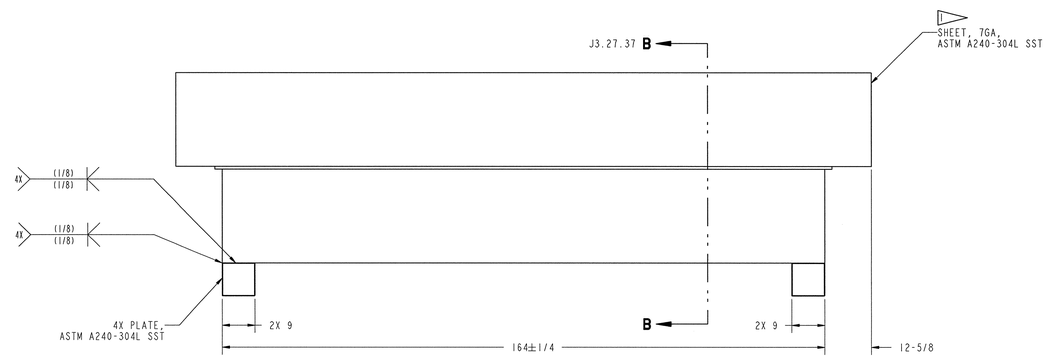

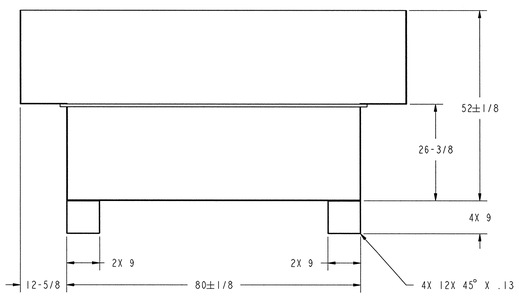

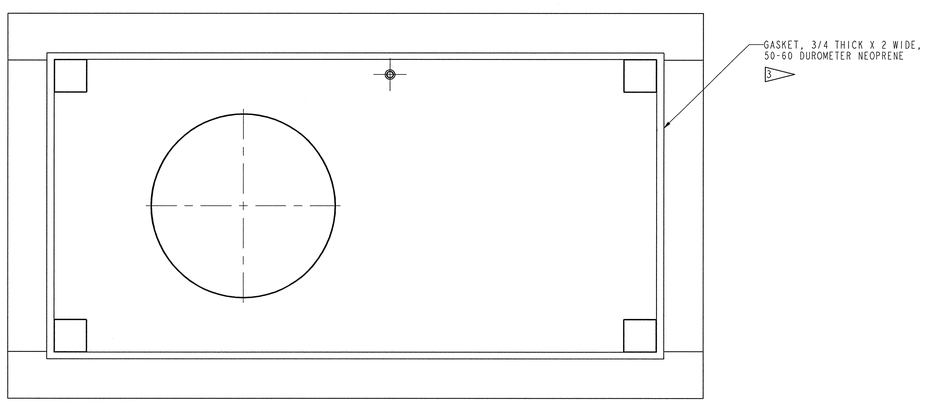

NOTES:

1. THE FABRICATION OF THE 7 GA. SST LINER IS SUBJECT TO THE REQUIREMENTS SET FORTH IN SECTION 15065. THE LINER SHALL CONTINUOUSLY FORM THE EXTERIOR SIDES, INTERIOR PORT SIDES AND THE BOTTOM SURFACES OF THE CONCRETE. THE TOP SURFACES OF THE TEE DO NOT NEED TO BE LINED. IN ADDITION, CONTINUOUSLY WELD ALL LINER PANELS USING FULL PENETRATION BUTT, GROOVE AND/OR FILLET WELDS.
2. USE A SINGLE ROW OF 1/4" DIAMETER BY 4-1/8" LONG 316L SST NELSON H4L HEADED CONCRETE ANCHORS AROUND PERIMETER OF THE TEE. SPACE ANCHORS ON NO MORE THAN 12" CENTERS. LOCATE ANCHORS 12" DOWN FROM THE TOP OF THE TEE.
3. GASKET SHALL BE ADHERED TO THE SST LINER USING LOCTITE DURABOND E-40FL EPOXY.
4. EXPOSED CONCRETE SHALL BE PAINTED IN ACCORDANCE WITH SECTION 09960.
5. SEE DRAWING J3.27.37 FOR ADDITIONAL CASK DOCKING TEE DETAILS.
6. SEE DRAWING S4.30.31 FOR STRUCTURAL REINFORCEMENT DETAILS INCLUDING LIFTING FEATURES, REBAR SIZES, BEAM SIZES, AND LOCATIONS.
7. ⊕ DENOTES SAFETY-SIGNIFICANT COMPONENT (SSC) SUBSTITUTIONS FOR SSC COMPONENTS MAY NOT BE MADE WITHOUT THE PROPER AUTHORITY.
8. COMPONENT WEIGHT: 74373 LBS.

SCALE: 1/16

108030700-J8E-8700-A044

Knight/Jacobs Joint Venture
701 Scarboro Road, MS 6253
Oak Ridge, TN 37830
865-241-9433
fax865-241-3400

MERRICK Engineers & Architects

UT-BATTELLE — Oak Ridge National Laboratory, managed by UT-Battelle, LLC, for the U.S. Dept. of Energy under contract DE-AC05-00OR22725

PROJECT NAME: SPALLATION NEUTRON SOURCE

TARGET BUILDING
CASK DOCKING TEE
DETAIL

I	48	49	50	PLANT	BLDG	FL	SH.	OF	TYPE	CLASS
3	J	X	X	8	8700		1	1	G	U

51	52	53	WBS		REV
NC	NA	IN	1.8.3.7	J3.27.31	0

REV	CHANGE TYPE	CHANGE SYSTEM	CHANGE NUMBER	DESCRIPTION	DSN	CHK	DEPT	DATE	PE	DATE	PJ	DATE	REQ	DATE	UTB	DATE	RPE	RPE NO	DATE		ST	CV	EC	EE	EM	IE	M	PD	SE	AR
0				CERTIFIED FOR CONSTRUCTION - 10/26/01	PCD	TBO			RPD	11/16/01	RPD	11/26/01			MT	11/12/01	TBO	106873	10/26/01										

REVISION OR ISSUE PURPOSE — REVISION APPROVALS — SQUAD CHECK

RPE — KARL BIARCZYK CSTM — REGISTERED ENGINEER — STATE OF TENNESSEE — MECHANICAL — REV. 0 — DATE 10/26/01

DRAWING APPROVALS		
DSN	P. Dad	10/26/01
DRW	P. Dad	10/26/01
CHK	[illegible]	10/26/01
DEPT		
PE	[illegible]	10/26/01
PJ	[illegible]	11/26/01
REQ		
UTB	[illegible]	11/12/01

NO REPRESENTATION OR WARRANTY, EXPRESSED OR IMPLIED, IS MADE AS TO THE ACCURACY, COMPLETENESS OR USEFULNESS OF THE INFORMATION OR STATEMENTS CONTAINED IN THESE DRAWINGS, OR THAT THE USE OR DISCLOSURE OF ANY INFORMATION, APPARATUS, METHOD OR PROCESS DISCLOSED IN THESE DRAWINGS MAY NOT INFRINGE PRIVATE RIGHTS OF OTHERS. NO LIABILITY IS ASSUMED WITH RESPECT TO THE USE OF, OR FOR DAMAGES RESULTING FROM THE USE OF, ANY INFORMATION, APPARATUS, METHOD OR PROCESS DISCLOSED IN THESE DRAWINGS. DRAWINGS MADE AVAILABLE FOR INFORMATION TO BIDDER ARE NOT TO BE USED FOR OTHER PURPOSES, AND ARE TO BE RETURNED UPON REQUEST OF THE FORWARDING CONTRACTOR.

P THIS DRAWING PRODUCED ON PRO-ENGINEER

THIS DOCUMENT CONTROLLED BY
CHANGE CONTROL SYSTEM 3
ENGINEERING PROCEDURE SNS-ENG-G001