GENERAL NOTES:
1) DIMENSIONS AND SYMBOLOGY ARE AMERICAN NATIONAL STANDARD UNLESS OTHERWISE SPECIFIED.
2) ROUGHNESS AVERAGE EQUALS 125 MICROINCHES UNLESS OTHERWISE SPECIFIED.
3) DIMENSIONS AND TOLERANCES ARE IN INCHES.
4) BREAK ALL SHARP EDGES.
5) TOLERANCES:
DECIMALS: .X = ±.060
.XX = ±.030
.XXX = ±.010
FRACTIONS: ±1/16
ANGULAR: ±1°

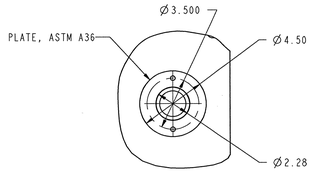

DETAIL 1
SCALE 1/4

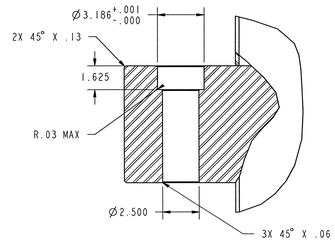

DETAIL 2
SCALE 1/4

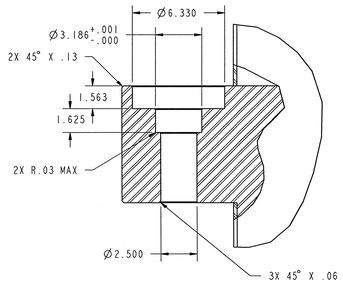

DETAIL 3
SCALE 1/4

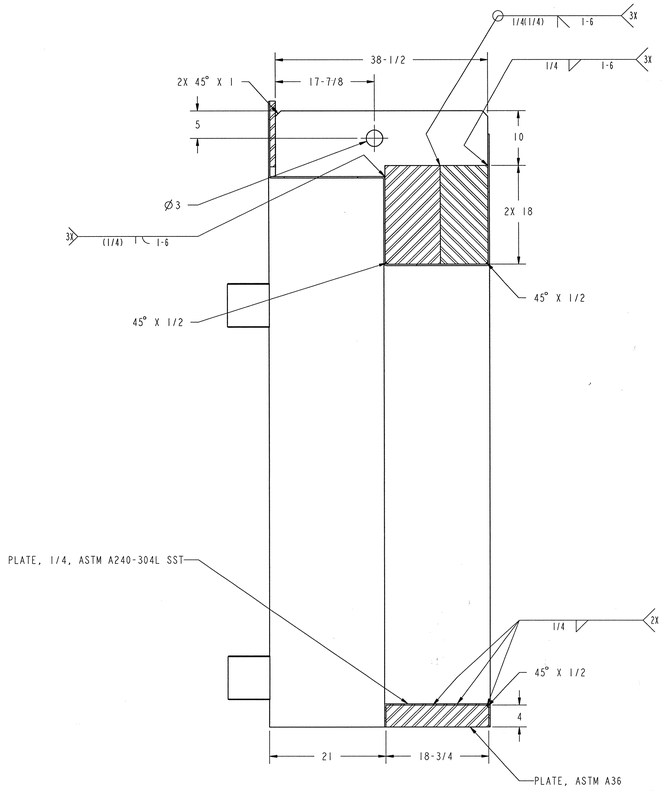

SECTION A-A

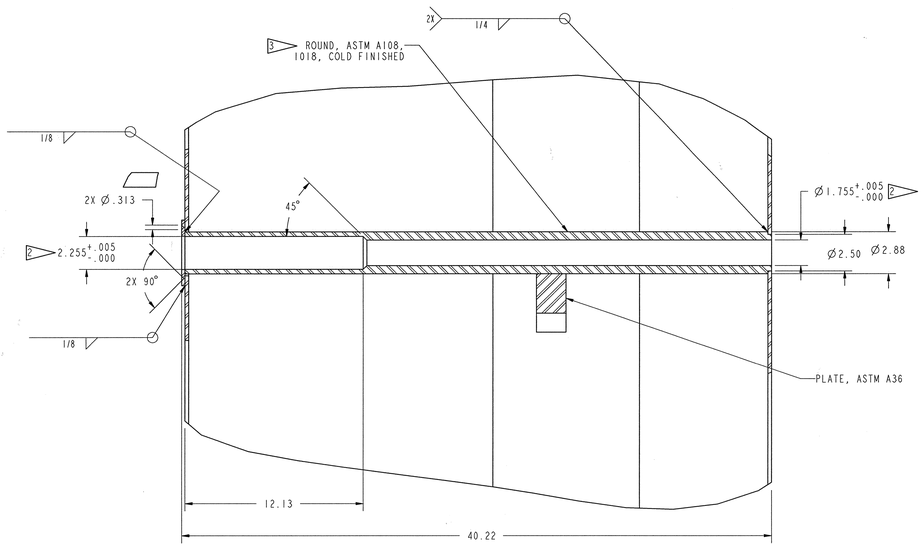

DETAIL 4
SCALE 1/4

NOTES:

1. REFERENCE FRAME WELDMENT DRAWING J3.26.31.

2 CLOSE DIAMETER BORES SHALL BE MACHINED TO A DEPTH OF 3.00 INCHES. FINISH BORE DIAMETERS TO NOMINAL ±.020

3 IT IS LEFT UP TO THE FABRICATORS DISCRETION ON HOW TO FABRICATE THE SHAFT HOUSING. THE HOUSING MAY BE FABRICATED USING TUBING AS LONG AS THE DIMENSIONS AND TOLERANCES ARE MET.

SCALE: 3/32

J3.26.33

108030700-J8E-8700-A154

Knight/Jacobs Joint Venture
701 Scarboro Road, MS 8253
Oak Ridge, TN 37830
865-241-9433
Fax 865-241-3400

MERRICK Engineers & Architects

UT-BATTELLE — Oak Ridge National Laboratory, managed by UT-Battelle, LLC, for the U.S. Dept. of Energy under contract DE-AC05-00OR22725

PROJECT NAME:
SPALLATION NEUTRON SOURCE
TARGET BUILDING
HOT CELL SHIELDED CLOSURE
FRAME WELDMENT DETAILS

1	48	49	50	PLANT	BLDG	FL	SH.	OF	TYPE	CLASS
3	J	X	X	8	8700		1	1	G	U

51	52	53	WBS		REV
NC	NA	IN	1.8.3.7	J3.26.33	0

DSN				10/23/01
DRW				10/23/01
CHK				10/25/01
DEPT				
PE				11/5/01
PJ				11/12/01
REQ				
UTB				11/12/01

RPE
NOVIE BUAROY, JR.
REGISTERED ENGINEER
AGE KUWAIT
NO. 9
COMMERCIAL
UNIVERSITY
STATE OF TENNESSEE
REV. 0 DATE 10/26/01
DRAWING APPROVALS

REV	CHANGE DATE	CHANGE SYSTEM	CHANGE NUMBER	DESCRIPTION	DSN	CHK	DEPT	DATE	PE	DATE	PJ	DATE	REQ	DATE	UTB	DATE	RPE	RPE NO	DATE	ST	CV	EC	EE	EM	IE	M	PD	SE	AR
0				CERTIFIED FOR CONSTRUCTION - 10/26/01	PCD	TBO			PCD	11/5/01	RPP	11/12/01			TBO	11/12/01	TBO	106873	10/26/01										

REVISION OR ISSUE PURPOSE — REVISION APPROVALS — SQUAD CHECK

NO REPRESENTATION OR WARRANTY, EXPRESSED OR IMPLIED, IS MADE AS TO THE ACCURACY, COMPLETENESS OR USEFULNESS OF THE INFORMATION OR STATEMENTS CONTAINED IN THESE DRAWINGS, OR THAT THE USE OR DISCLOSURE OF ANY INFORMATION, APPARATUS, METHOD OR PROCESS DISCLOSED IN THESE DRAWINGS MAY NOT INFRINGE PRIVATE RIGHTS OF OTHERS. NO LIABILITY IS ASSUMED WITH RESPECT TO THE USE OF, OR FOR DAMAGES RESULTING FROM THE USE OF, ANY INFORMATION, APPARATUS, METHOD OR PROCESS DISCLOSED IN THESE DRAWINGS. DRAWINGS MADE AVAILABLE FOR INFORMATION TO BIDDER ARE NOT TO BE USED FOR OTHER PURPOSES, AND ARE TO BE RETURNED UPON REQUEST OF THE FORWARDING CONTRACTOR.

P THIS DRAWING PRODUCED ON PRO-ENGINEER

THIS DOCUMENT CONTROLLED BY
CHANGE CONTROL SYSTEM 3
ENGINEERING PROCEDURE SNS-ENG-G001