GENERAL NOTES:
1) DIMENSIONS AND SYMBOLOGY ARE AMERICAN NATIONAL STANDARD UNLESS OTHERWISE SPECIFIED.
2) ROUGHNESS AVERAGE EQUALS 125 MICROINCHES UNLESS OTHERWISE SPECIFIED.
3) DIMENSIONS AND TOLERANCES ARE IN INCHES.
4) BREAK ALL SHARP EDGES.
5) TOLERANCES:
DECIMALS: .X = ±.060
.XX = ±.030
.XXX = ±.010
FRACTIONS: ±1/16
ANGULAR: ±1°

NEXT ASS'Y:
FINAL ASS'Y:

PARTS LIST

PART NO.	DRAWING NO.	DESCRIPTION	QTY
1	J3.12.33	STRIKER PLATE, LATCH	1
2	J3.12.34	SWINGING SHIELD HINGE PIN	2
3	J3.12.35	SWINGING SHIELD LATCH HANDLE SHAFT-4	1
4	J3.12.38	SWINGING SHIELD LATCH HANDLE	1
5	J3.12.39	SUPPORT WELDMENT-3	1
6	J3.26.31	HOT CELL SHIELDED CLOSURE FRAME WELDMENT	1
7	J3.26.32	HOT CELL SHIELDED CLOSURE WELDMENT	1
8	J3.26.34	HOT CELL SHIELDED CLOSURE LATCH HANDLE	1
9		SHCS, 3/8-16 UNC X 1-1/4 LG., ASTM A574	6
10		BALL PLUNGER, CARR LANE P/N: CL-70-BP-2	1
11		DOOR OPERATOR, PER DATA SHEET DO-3022	1
12		EXTERNAL SNAP RING, ARCON P/N: 1460-150	2
13		EXTERNAL SNAP RING, ARCON P/N: 5304-200	4
14		FLANGED BEARING, McMASTER CARR P/N: 59575K38	1
15		FLANGED BEARING, McMASTER CARR P/N: 59575K41	1
16		GASKET, MINOR P/N: ZX-8070, NEOPRENE, 40-50 DUROMETER	1
17		HEX SOCKET CAM FOLLOWER, SMITH BEARING P/N: HR-2-1/4-XB	1
18		RADIAL BEARING, TORRINGTON P/N: 20SFL32	2
19		SCREW, HEX, 1/2-13 UNC X 3 LG., ASTM A320 GRADE L7	2
20		SOC HD SET SCR, 3/8-16 UNC X 1-1/4LG., ASTM A320 GRADE L7	2
21		SQ KEY, 3/8 X 3, STEEL	2
22		THRUST BEARING, TORRINGTON P/N: 20TPS103	1
23		WASHER, PLAIN, TYPE A, 2, ASTM F436 TYPE 1	4
24		WASHER, PLAIN, TYPE A, NARROW 1/2, ASTM F436 TYPE 1	2

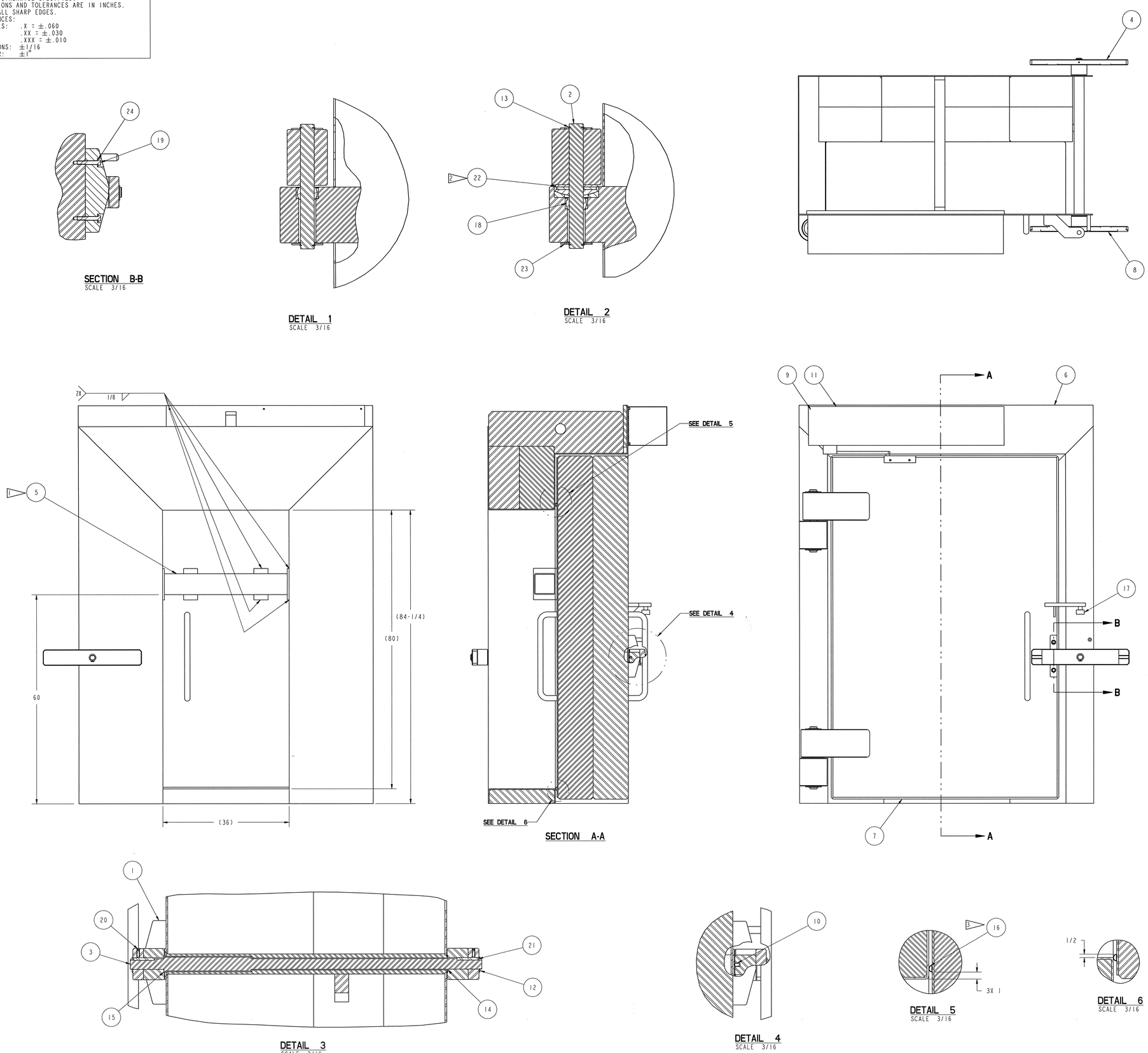

NOTES:

1. SUPPORT WELDMENT IS FOR SUPPORT DURING SHIPMENT AND INSTALLATION. REMOVE SUPPORTS, GRIND, AND REFINISH AFTER DOOR IS CAST IN WALL.
2. LUBRICATION OF THRUST BEARING TO BE NLGI GRADE 3 GREASE.
3. GASKET CORNERS TO BE MITERED AND VULCANIZED. SHIP GASKET LOOSE. GASKET SHALL BE GLUED TO THE DOOR AFTER THE DOOR AND THE FRAME ARE CAST IN WALL. USE LOCTITE DURABOND E-40FL EPOXY TO ADHERE GASKET TO THE STEEL FRAME.
4. THIS COMPONENT IS SUBJECT TO THE FABRICATION REQUIREMENTS SET FORTH IN SECTION 15065
5. THE HOT CELL SHIELDED CLOSURE ASSEMBLY WILL BE CAST IN THE WALL INTO THE HOT CELL. REFERENCE STRUCTURAL DRAWINGS FOR INSTALLATION DETAILS.
6. USE HANDLE TO COMPRESS GASKET, AND TO BREAK THE DOOR AWAY FROM THE GASKET (BREAK VACUUM). USE THE DOOR OPERATOR FOR THE REMAINING DOOR OPENING AND CLOSING ROTATION.
7. FABRICATOR SHALL INSTALL, ADJUST AND TEST THE DOOR OPERATOR (PER DOOR OPERATOR MANUFACTURER'S INSTRUCTIONS) AND OPERATION OF DOOR.
8. COMPONENT WEIGHT: 63647 LBS.

SCALE: 3/32

108030700-J8E-8700-A042

Knight/Jacobs Joint Venture
701 Scarboro Road, MS 8253
Oak Ridge, TN 37830
865-241-9433
fax 865-241-3400

MERRICK Engineers & Architects

UT-BATTELLE — Oak Ridge National Laboratory, managed by UT-Battelle, LLC, for the U.S. Dept. of Energy under contract DE-AC05-00OR22725

PROJECT NAME:
SPALLATION NEUTRON SOURCE
TARGET BUILDING
HOT CELL SHIELDED CLOSURE ASSEMBLY

1	48	49	50	PLANT	BLDG	FL	SH.	OF	TYPE	CLASS
3	J	X	X	8	8700		1	1	G	U

51	52	53	WBS	REV
NC	NA	IN	1.8.3.7	J3.26.30	0

REV	CHANGE TYPE	CHANGE CONTROL SYSTEM	CHANGE NUMBER	DESCRIPTION	DSN	CHK	DEPT	DATE	PE	DATE	PJ	DATE	REQ	DATE	UTB	DATE	RPE	RPE NO	DATE		ST	CV	EC	EE	EM	IE	M	PD	SE	AR
0				CERTIFIED FOR CONSTRUCTION - 10/26/01	PCD	TBO				9/13/01	RPD	11/12/01				11/12/01	TBO	106873	10/26/01											

REVISION OR ISSUE PURPOSE — REVISION APPROVALS — SQUAD CHECK

RPE — REV. 0 DATE 10/27/01

DSN	P. Rao	10/26/01
DRW	P. Rao	10/26/01
CHK	TQ	10/26/01
DEPT		
PE	R. Karsin	11/15/01
PJ	R. A. Green	11/26/01
REQ		
UTB	M. Thurm	11/12/01

DRAWING APPROVALS

NO REPRESENTATION OR WARRANTY, EXPRESSED OR IMPLIED, IS MADE AS TO THE ACCURACY, COMPLETENESS OR USEFULNESS OF THE INFORMATION OR STATEMENTS CONTAINED IN THESE DRAWINGS, OR THAT THE USE OR DISCLOSURE OF ANY INFORMATION, APPARATUS, METHOD OR PROCESS DISCLOSED IN THESE DRAWINGS MAY NOT INFRINGE PRIVATE RIGHTS OF OTHERS. NO LIABILITY IS ASSUMED WITH RESPECT TO THE USE OF, OR FOR DAMAGES RESULTING FROM THE USE OF, ANY INFORMATION, APPARATUS, METHOD OR PROCESS DISCLOSED IN THESE DRAWINGS. DRAWINGS MADE AVAILABLE FOR INFORMATION TO BIDDER ARE NOT TO BE USED FOR OTHER PURPOSES, AND ARE TO BE RETURNED UPON REQUEST OF THE FORWARDING CONTRACTOR.

P THIS DRAWING PRODUCED ON PRO-ENGINEER

THIS DOCUMENT CONTROLLED BY
CHANGE CONTROL SYSTEM 3
ENGINEERING PROCEDURE SNS-ENG-G001