GENERAL NOTES:
1) DIMENSIONS AND SYMBOLOGY ARE AMERICAN NATIONAL STANDARD UNLESS OTHERWISE SPECIFIED.
2) ROUGHNESS AVERAGE EQUALS 125 MICROINCHES UNLESS OTHERWISE SPECIFIED.
3) DIMENSIONS AND TOLERANCES ARE IN INCHES.
4) BREAK ALL SHARP EDGES.
5) TOLERANCES:
DECIMALS: .X = ±.060
.XX = ±.030
.XXX = ±.010
FRACTIONS: ±1/16
ANGULAR: ±1°

NEXT ASS'Y:
FINAL ASS'Y:

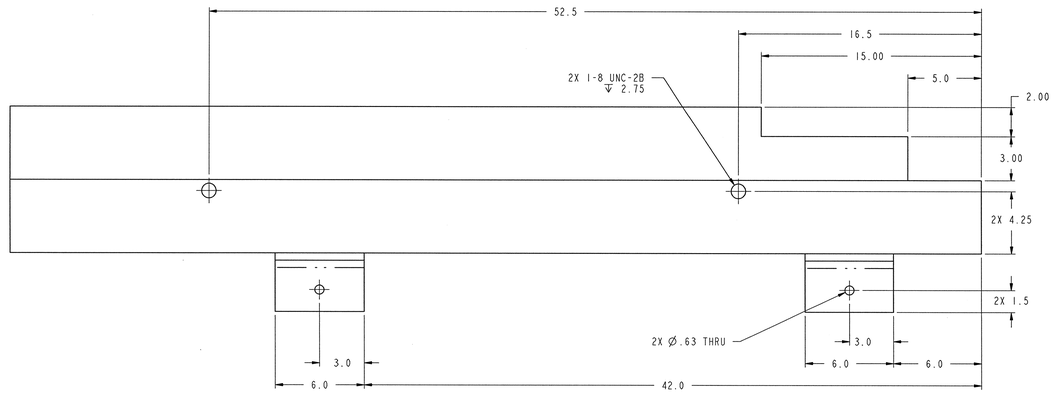

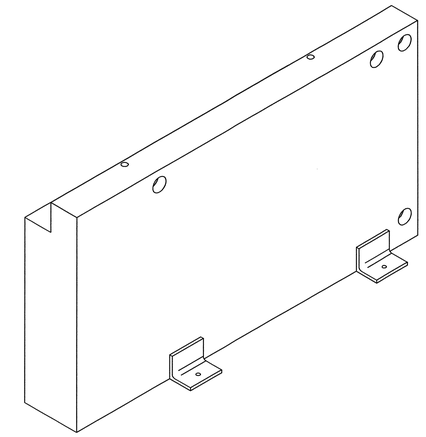

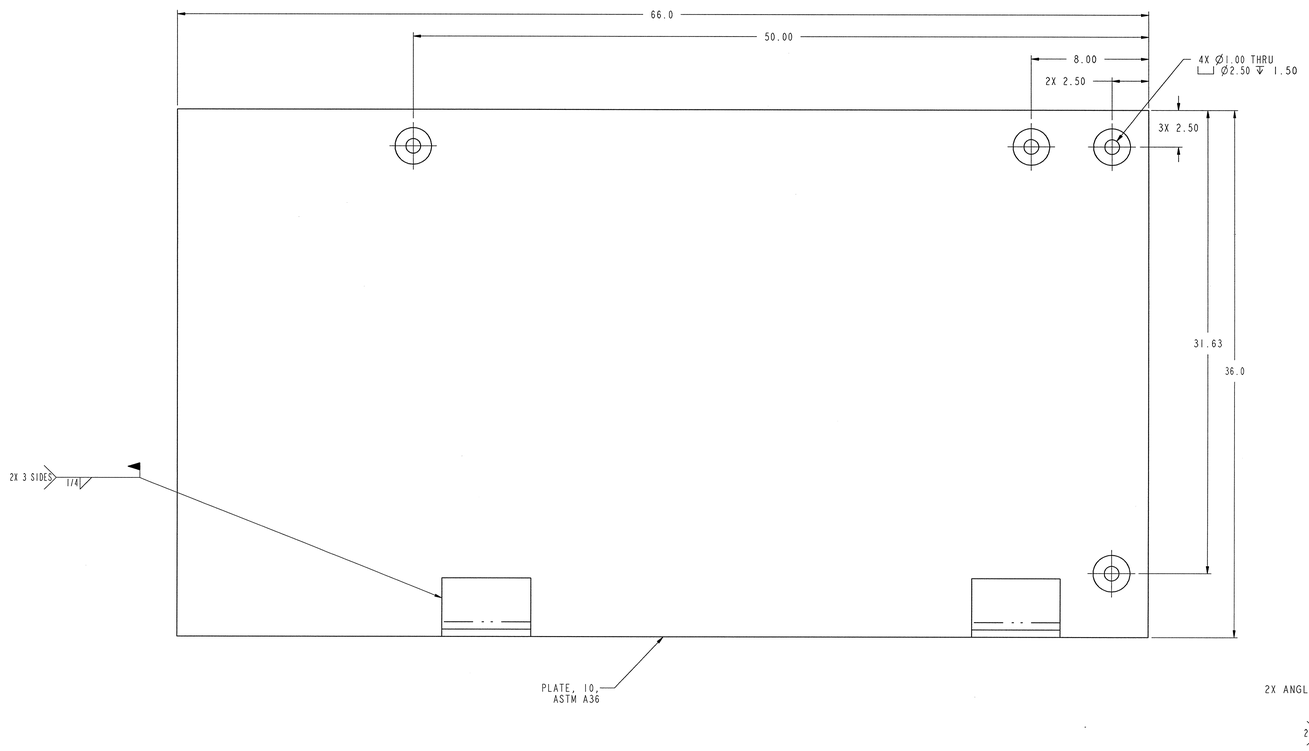

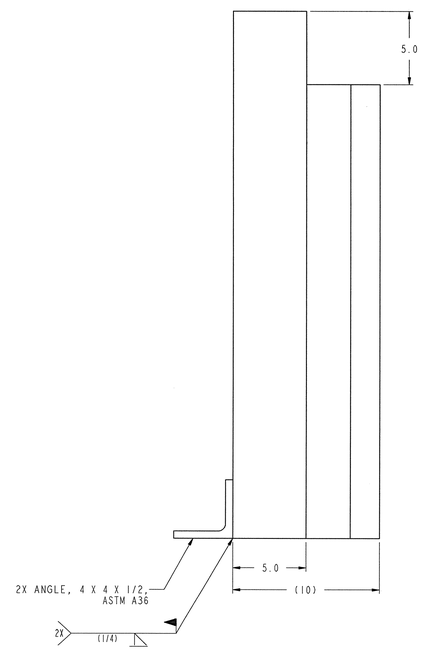

NOTES:

1. THIS COMPONENT IS SUBJECT TO THE REQUIREMENTS SET FORTH IN SECTION 15065.
2. PRIME AND PAINT ALL EXPOSED CARBON STEEL IN ACCORDANCE WITH SECTION 09960.
3. COMPONENT WEIGHT: 5873 LBS.

SCALE: 1/4

J3-23-35

108030700-J8E-8700-A278

Knight/Jacobs Joint Venture
701 Scarboro Road, MS 8253
Oak Ridge, TN 37830
865-241-9433
fax 865-241-3400

MERRICK Engineers & Architects

UT-BATTELLE — Oak Ridge National Laboratory, managed by UT-Battelle, LLC, for the U.S. Dept. of Energy under contract DE-AC05-00OR22725

PROJECT NAME:
SPALLATION NEUTRON SOURCE
TARGET BUILDING
INPUT ENCLOSURE
LEFT SHIELD PANEL

1	48	49	50	PLANT	BLDG	FL	SH.	OF	TYPE	CLASS
3	J	X	X	8	8700		1	1	G	U
51		52		53	WBS					REV
NC		NA		IN	1.8.3.7	J3.23.35				0

REV	CHANGE TYPE	CHANGE CONTROL SYSTEM	CHANGE NUMBER	DESCRIPTION	DSN	CHK	DEPT	DATE	PE	DATE	PJ	DATE	REQ	DATE	UTB	DATE	RPE	RPE NO	DATE		ST	CV	EC	EE	EM	IE	M	PD	SE	AR
0				CERTIFIED FOR CONSTRUCTION - 10/26/01	PCD	TBO			RPD	11/13/01	RAD	11/12/01				11/12/01	TBO	106873	10/26/01										

REVISION OR ISSUE PURPOSE — REVISION APPROVALS — SQUAD CHECK

RPE — STATE OF TENNESSEE

REV. 0 DATE 10/26/01

DRAWING APPROVALS

DSN	P. David	10/26/01
DRW	P. David	10/26/01
CHK	[illegible]	10/26/01
DEPT		
PE	[illegible]	11/13/01
PJ	R.A. Dean	11/12/01
REQ		
UTB	[illegible]	11/12/01

NO REPRESENTATION OR WARRANTY, EXPRESSED OR IMPLIED, IS MADE AS TO THE ACCURACY, COMPLETENESS OR USEFULNESS OF THE INFORMATION OR STATEMENTS CONTAINED IN THESE DRAWINGS, OR THAT THE USE OR DISCLOSURE OF ANY INFORMATION, APPARATUS, METHOD OR PROCESS DISCLOSED IN THESE DRAWINGS MAY NOT INFRINGE PRIVATE RIGHTS OF OTHERS. NO LIABILITY IS ASSUMED WITH RESPECT TO THE USE OF, OR FOR DAMAGES RESULTING FROM THE USE OF, ANY INFORMATION, APPARATUS, METHOD OR PROCESS DISCLOSED IN THESE DRAWINGS. DRAWINGS MADE AVAILABLE FOR INFORMATION TO BIDDER ARE NOT TO BE USED FOR OTHER PURPOSES, AND ARE TO BE RETURNED UPON REQUEST OF THE FORWARDING CONTRACTOR.

P THIS DRAWING PRODUCED ON PRO-ENGINEER

THIS DOCUMENT CONTROLLED BY
CHANGE CONTROL SYSTEM 3
ENGINEERING PROCEDURE SNS-ENG-G001