GENERAL NOTES:
1) DIMENSIONS AND SYMBOLOGY ARE AMERICAN NATIONAL STANDARD UNLESS OTHERWISE SPECIFIED.
2) ROUGHNESS AVERAGE EQUALS 125 MICROINCHES UNLESS OTHERWISE SPECIFIED.
3) DIMENSIONS AND TOLERANCES ARE IN INCHES.
4) BREAK ALL SHARP EDGES.
5) TOLERANCES:
DECIMALS: .X = ±.060
.XX = ±.030
.XXX = ±.010
FRACTIONS: ±1/16
ANGULAR: ±1°

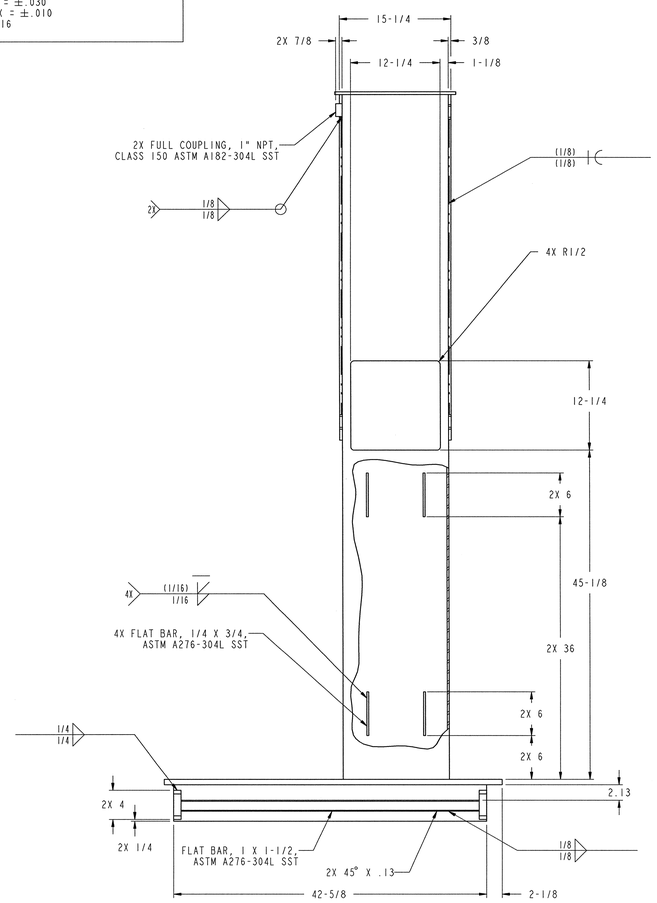

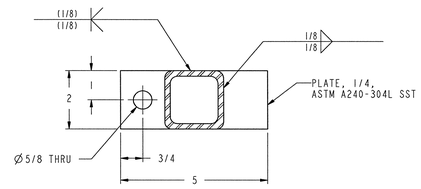

SECTION A-A
SCALE 1/2

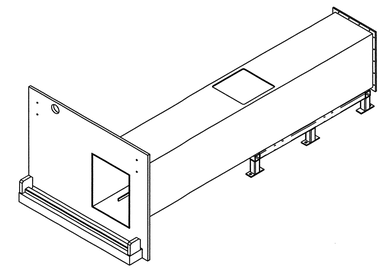

NOTES:

1. THIS COMPONENT IS SUBJECT TO THE REQUIREMENTS SET FORTH IN SECTION 15065.
2. EACH JOINT OF THE TUBE FRAME SHALL BE FULLY WELDED ALL AROUND USING 1/8 INCH FILLET OR FLARE WELDS OR A COMBINATION OF FILLET AND FLARE WELDS.
3. 18 X 14-1/2 TUNNEL MAY BE FABRICATED FROM WELDED PLATES OR PARTIALLY FORMED AND WELDED. IF FORMED BENDS SHALL BE MINIMUM RADIUS. THE TUNNEL SHALL BE CONTINOUSLY WELDED ON THE INSIDE. FABRICATOR MAY ELECT TO USE SKIP WELDS ON THE OUTSIDE. SEE 15065 FOR FINISHING REQUIREMENTS ON WELDS AND PLATE.
4. COMPONENT WEIGHT: 1007 LBS.

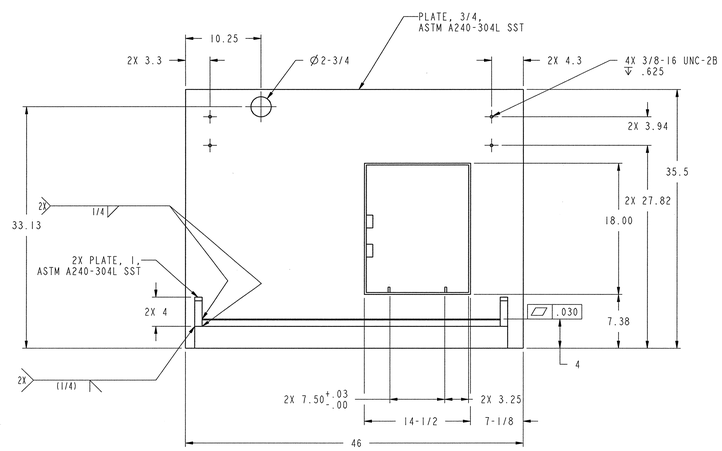

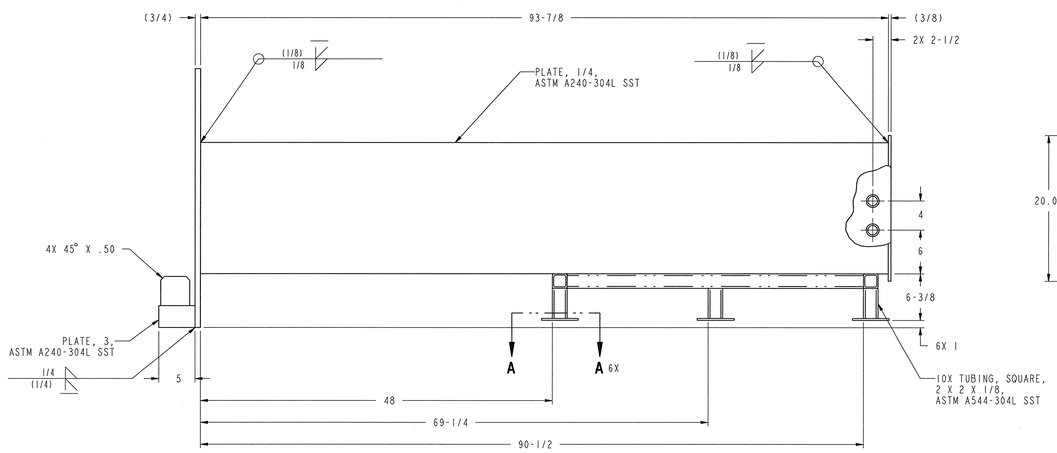

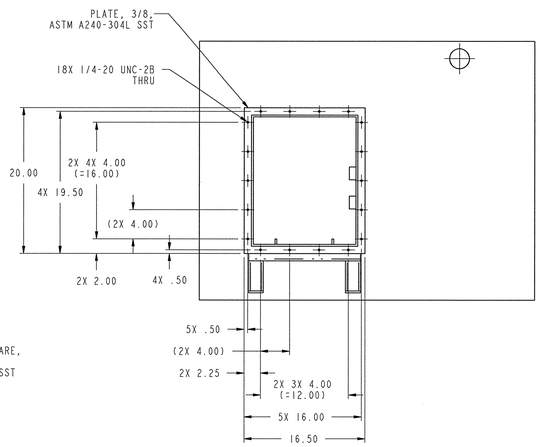

SCALE: 1/8

J3-23-32

108030700-J8E-8700-A275

Knight/Jacobs Joint Venture
701 Scarboro Road, MS 8253
Oak Ridge, TN 37830
865-241-9433
fax 865-241-3400

MERRICK Engineers & Architects

UT-BATTELLE
Oak Ridge National Laboratory, managed by UT-Battelle, LLC, for the U.S. Dept. of Energy under contract DE-AC05-00OR22725

PROJECT NAME:
SPALLATION NEUTRON SOURCE
TARGET BUILDING
INPUT ENCLOSURE
EMBEDDED TUNNEL WELDMENT

1	48	49	50	PLANT	BLDG	FL	SH.	OF	TYPE	CLASS
3	J	X	X	8	8700		1	1	G	U

51	52	53	WBS	REV
NC	NA	IN	1.8.3.7	J3.23.32	0

REV	CHANGE TYPE	CONTROL SYSTEM	ENGINEERING NUMBER	DESCRIPTION	DSN	CHK	DEPT	DATE	PE	DATE	PJ	DATE	REQ	DATE	UTB	DATE	RPE	RPE NO	DATE	ST	CV	EC	EE	EM	IE	M	PD	SE	AR
0				CERTIFIED FOR CONSTRUCTION - 10/26/01	PCD	TBO			RBD	11/13/01	RBD	11/20/01				11/12/01	TBO	106873	10/26/01										

REVISION OR ISSUE PURPOSE — REVISION APPROVALS — SQUAD CHECK

RPE
TORIE BLAROT OLSEN
REGISTERED PROFESSIONAL ENGINEER
CIVIL
CERTIFICATE NO. 100-000123
STATE OF TENNESSEE

REV. 0 DATE 10/25/01

DRAWING APPROVALS

DSN	P. Dod	11/20/01
DRW	P. Dod	11/20/01
CHK	T. Ar	11/20/01
DEPT		
PE	R. Baum	11/13/01
PJ	R. Dixon	11/20/01
REQ		
UTB	M. Stevens	11/12/01

NO REPRESENTATION OR WARRANTY, EXPRESSED OR IMPLIED, IS MADE AS TO THE ACCURACY, COMPLETENESS OR USEFULNESS OF THE INFORMATION OR STATEMENTS CONTAINED IN THESE DRAWINGS, OR THAT THE USE OR DISCLOSURE OF ANY INFORMATION, APPARATUS, METHOD OR PROCESS DISCLOSED IN THESE DRAWINGS MAY NOT INFRINGE PRIVATE RIGHTS OF OTHERS. NO LIABILITY IS ASSUMED WITH RESPECT TO THE USE OF, OR FOR DAMAGES RESULTING FROM THE USE OF, ANY INFORMATION, APPARATUS, METHOD OR PROCESS DISCLOSED IN THESE DRAWINGS. DRAWINGS MADE AVAILABLE FOR INFORMATION TO BIDDER ARE NOT TO BE USED FOR OTHER PURPOSES, AND ARE TO BE RETURNED UPON REQUEST OF THE FORWARDING CONTRACTOR.

P THIS DRAWING PRODUCED ON PRO-ENGINEER

THIS DOCUMENT CONTROLLED BY
CHANGE CONTROL SYSTEM 3
ENGINEERING PROCEDURE SNS-ENG-G001