NEXT ASS'Y: | FINAL ASS'Y:

PARTS LIST

PART NO.	DRAWING NO.	DESCRIPTION	QTY
1	J3.23.31	INPUT ENCLOSURE SUPPLEMENTAL SHIELDING	1
2	J3.23.32	INPUT ENCLOSURE EMBEDDED TUNNEL WELDMENT	1
3	J3.23.33	INPUT ENCLOSURE TUBING WELDMENT	1
4	J3.23.34	INPUT ENCLOSURE SHAFT	1
5	J3.23.35	INPUT ENCLOSURE LEFT SHIELD PANEL	1
6	J3.23.36	INPUT ENCLOSURE RIGHT SHIELD PANEL	1
7	J3.23.37	INPUT ENCLOSURE TOP SHIELD PANEL	1
8	J3.23.38	INPUT ENCLOSURE TOP ACCESS PLUG	1
9	J3.23.39	INPUT ENCLOSURE FRONT SHIELD PANEL	1
10	J3.25.30	INPUT ENCLOSURE ROLLING DOOR ASSEMBLY	1
11	J3.25.32	INPUT ENCLOSURE TRAY WELDMENT	1
12	J3.25.34	INPUT ENCLOSURE ENCODER SUPPORT BRACKET	1
13	J3.25.34	INPUT ENCLOSURE END PLATE	1
14	J3.25.34	INPUT ENCLOSURE END PLATE GASKET	1
15		SCREW, HEX, 3/8-16 UNC X 1 LG., ASTM F593 GROUP 1CW	4
16		WASHER, PLAIN, TYPE B, NARROW, 3/8, AISI 300 SERIES SST	4
17		WASHER, .516 ID X 2.00 OD X .120, ASTM A240-304L SST	1
18		SCREW, HEX, 1/2-13 UNC X 1 LG., ASTM F593 GROUP 1CW	1
19		WASHER, PLAIN, TYPE B, NARROW, 3/4, ASTM F436 TYPE 1	8
20		NUT, HEX, 3/4-10 UNC, ASTM A194 GRADE 7	8
21		WASHER, PLAIN, TYPE B, WIDE, 1/4, AISI 300 SERIES SST	6
22		SCREW, HEX, 1/4-20 UNC X 3/4 LG., ASTM F593 GROUP 1CW	27
23		WASHER, PLAIN, TYPE B, REGULAR, 1/4, AISI 300 SERIES SST	18
24		WASHER, PLAIN, TYPE B, REGULAR, 1/4, ASTM F436 TYPE 1	4
25		NUT, HEX, 1/4-20 UNC, ASTM A194 GRADE 2H, PLAIN	1
26		WELD STUD, MALE, 1/4-20 UNC X 1/2 LG., AISI TYPE 304L SST	10
27		WASHER, PLAIN, TYPE B, NARROW, 1/4, AISI 300 SERIES SST	10
28		NUT, HEX, 1/4-20 UNC, ASTM F594-304 CW	10
29		BEARING RAIL, 40.75" LONG, PACIFIC BEARING P/N: HVR-0	1
30		ENCODER, DYNAPAR P/N: HS35036040100 W/25' CABLE	1
31		EYE BOLT, McMASTER CARR P/N: 3014T52	3
32		EYE BOLT, McMASTER CARR P/N: 3014T55	8
33		FLANGED BUSHING, PEEK, McMASTER CARR P/N: 6627K36	1
34		FLANGED BUSHING, FRELON, McMASTER-CARR P/N: 59575K41	1
35		GASKET, 3/4 THICK, 13.75 SQ ODX12.25 SQ ID, 50-60 DURO NEOPRENE	1
36		HAIRPIN COTTER, 302 SST, PIVOT POINT P/N: HAIR-12	1
37		HANDLE, 10", ALUMINUM, 5/8 BORE, McMASTER CARR P/N: 6021K18	1
38		KEY, SQUARE, 3/16 X 3/16 X 2, SST, ANSI B17.1	1
39		LINEAR POSITIONING TABLE, PER DATA SHEET, LPT-3032	1
40		RAIL CLAMP FLANGE, PACIFIC BEARING P/N: HVC-0	2
41		SOC HD SET SCR, 1/4-20 UNC X 3/4 LG., ASTM A320 GRADE L7	1
42		SPUR GEAR, 20PA, W/ 1/4" KEYWAY, GLOBE GEAR P/N: T416SS	1
43		STUD, 3/4-10 UNC X 6-1/2 LG., ASTM A193 B7	8

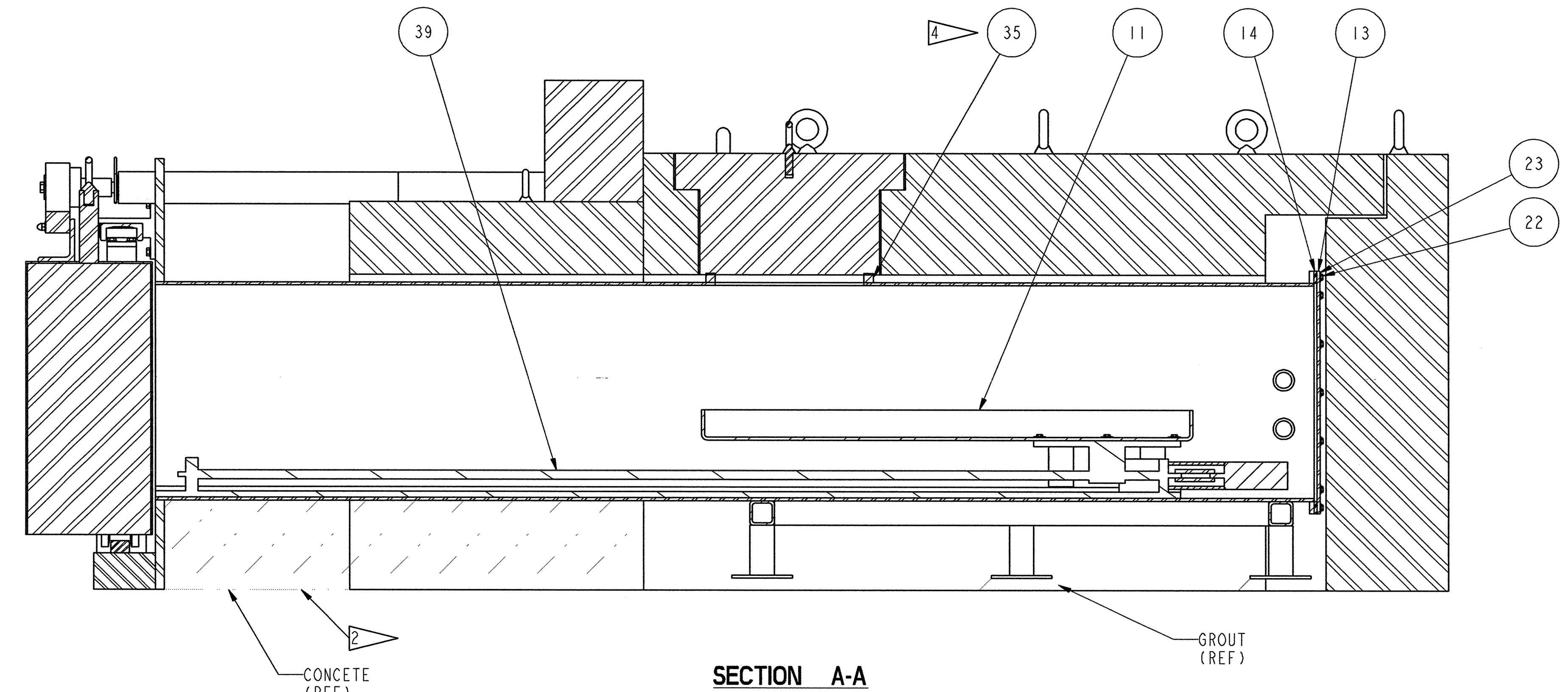

SECTION A-A

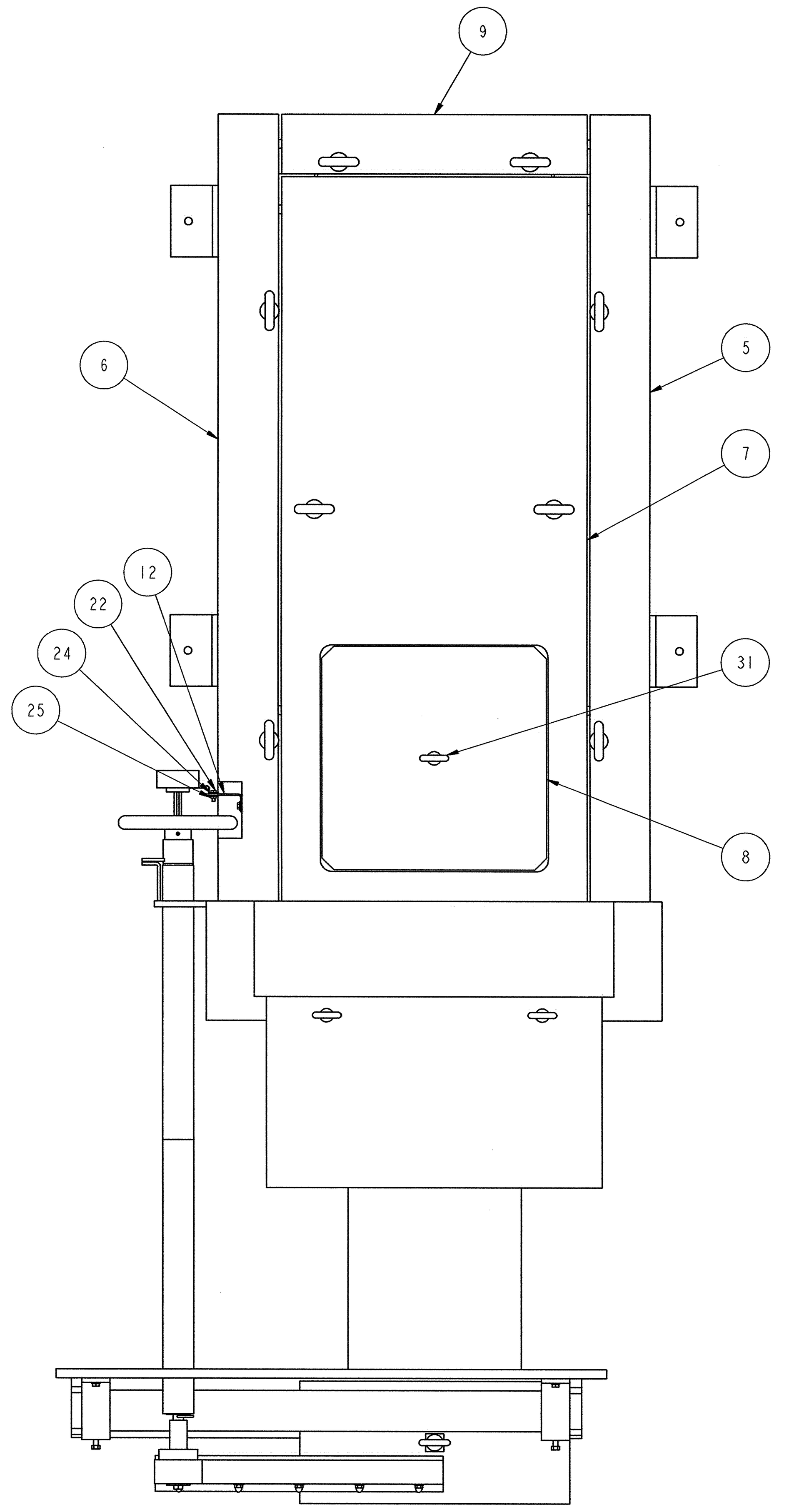

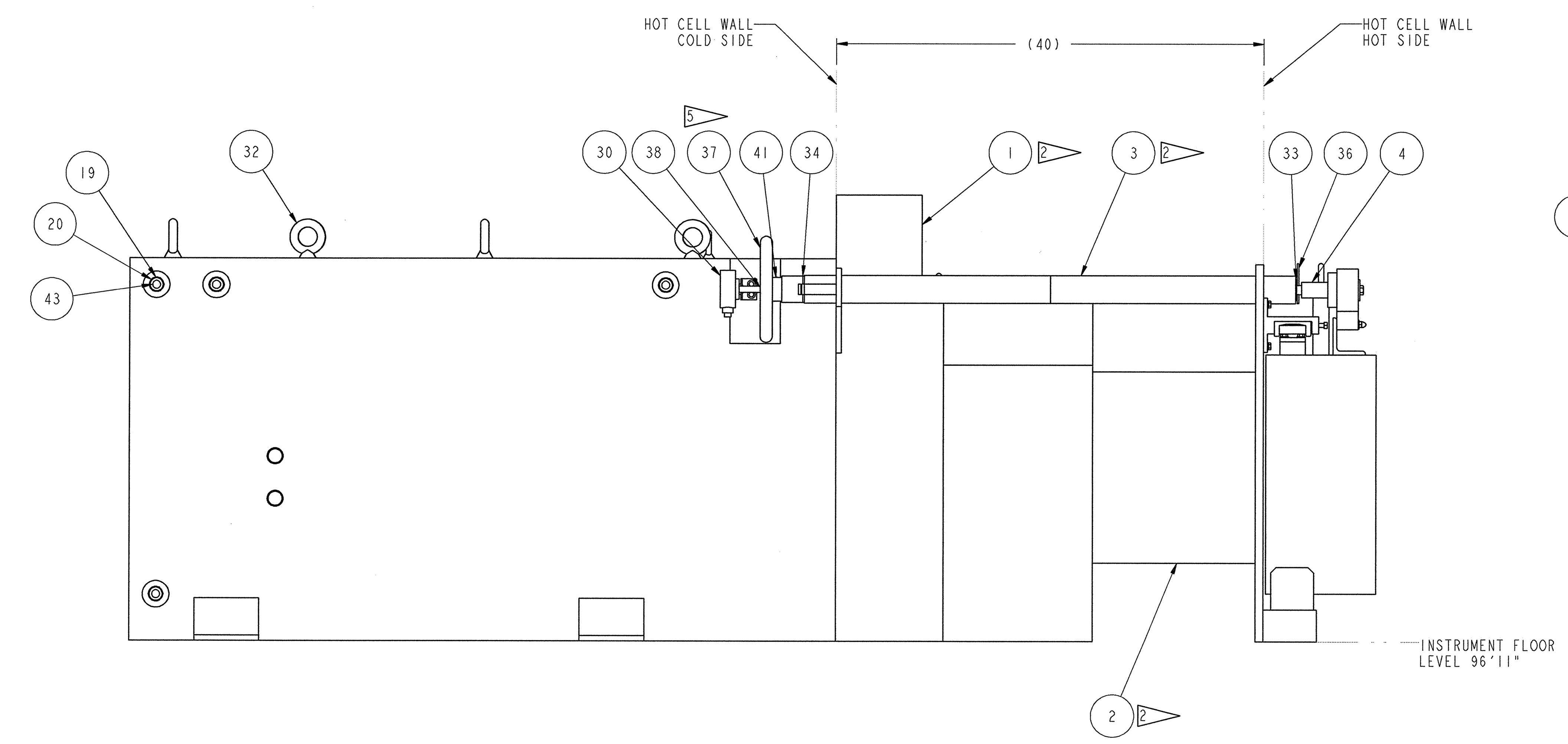

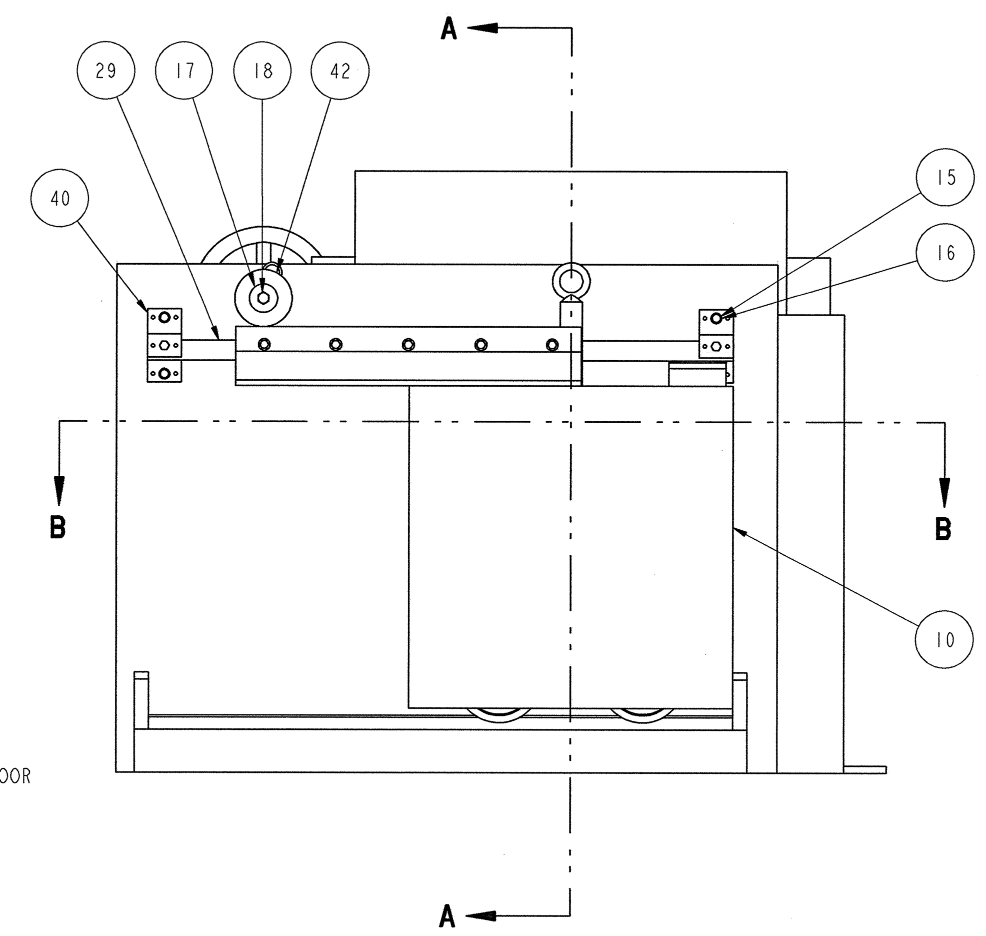

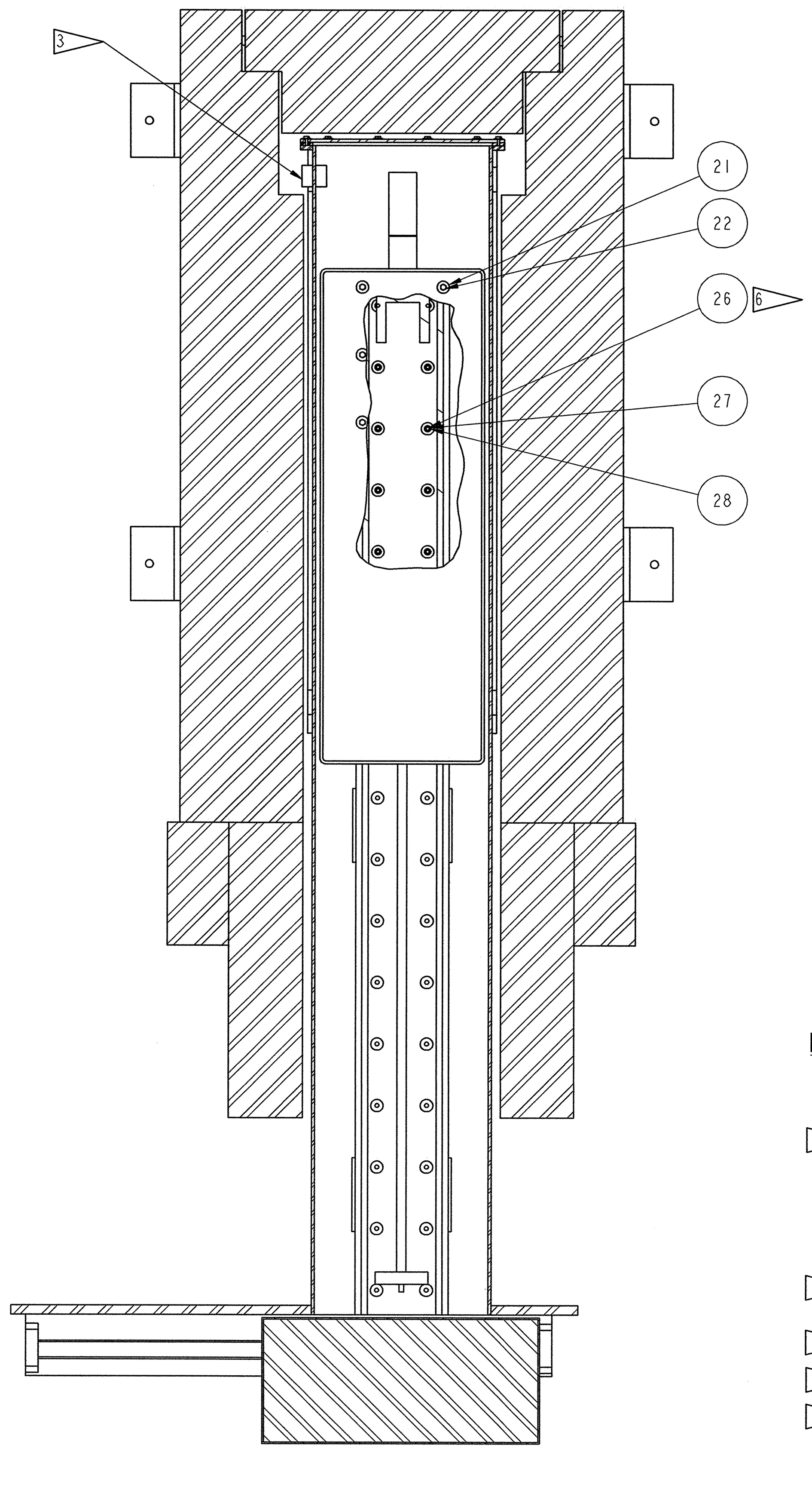

SECTION B-B

NOTES:

1. THIS COMPONENT IS SUBJECT TO THE REQUIREMENTS SET FORTH IN SECTION 15065.
2. PART NUMBERS 1, 2, AND 3 SHALL BE CAST IN THE SOUTH HOT CELL WALL. SEE J9 SERIES DRAWINGS FOR LOCATIONS AND INSTALLATION DETAILS. ENSURE THAT SHAFT, SHAFT HOUSING AND PINION IS ALIGNED WITH RACK AND ENSURE SMOOTH OPERATION OF THE DOOR PRIOR TO PLACEMENT OF CONCRETE. PLACE HEAVY WEIGHT CONCRETE PER SECTION 03300 UNDER TUNNEL AS WELL.
3. USE COUPLINGS TO FEED WIRING TO LINEAR POSITIONING TABLE (POWER AND CONTROL). WIRES SHALL BE POTTED.
4. ADHERE GASKET TO SST USING LOCTITE E40-FL ADHESIVE.
5. HANDLE SHALL BE MODIFIED TO INCLUDE A 3/16" KEYWAY.
6. MATCH WELD STUDS WITH HOLE PATTERN IN LINEAR POSITIONING TABLE.

SCALE: 1/8

108030700-J8E-8700-A255

Knight/Jacobs Joint Venture
701 Scarboro Road, MS 8253
Oak Ridge, TN 37830
865-241-9433
fax 865-241-3400

MERRICK Engineers & Architects

UT-BATTELLE
Oak Ridge National Laboratory, managed by UT-Battelle, LLC, for the U.S. Dept. of Energy under contract DE-AC05-00OR22725

PROJECT NAME: SPALLATION NEUTRON SOURCE

TARGET BUILDING INPUT ENCLOSURE ASSEMBLY

1	48	49	50	PLANT	BLDG	FL	SH.	OF	TYPE	CLASS
3	J	X	X	8	8700		1	1	G	U

51	52	53	WBS	DWG NO.	REV
NC	NA	IN	1.8.3.7	J3.23.30	0

J3-23-30

REV	DESCRIPTION	PE DATE	PJ DATE	UTB DATE	RPE NO	DATE
0	CERTIFIED FOR CONSTRUCTION - 10/26/01	11/16/01	11/12/01	11/12/01	106873	10/26/01

REVISION OR ISSUE PURPOSE — REVISION APPROVALS — SQUAD CHECK — DRAWING APPROVALS

DSN 10/23/01 · DRW 10/23/01 · CHK 10/23/01 · PE 11/13/01 · PJ 11/12/01 · UTB 11/12/01

NO REPRESENTATION OR WARRANTY, EXPRESSED OR IMPLIED, IS MADE AS TO THE ACCURACY, COMPLETENESS OR USEFULNESS OF THE INFORMATION OR STATEMENTS CONTAINED IN THESE DRAWINGS, OR THAT THE USE OR DISCLOSURE OF ANY INFORMATION, APPARATUS, METHOD OR PROCESS DISCLOSED IN THESE DRAWINGS MAY NOT INFRINGE PRIVATE RIGHTS OF OTHERS. NO LIABILITY IS ASSUMED WITH RESPECT TO THE USE OF, OR FOR DAMAGES RESULTING FROM THE USE OF, ANY INFORMATION, APPARATUS, METHOD OR PROCESS DISCLOSED IN THESE DRAWINGS. DRAWINGS MADE AVAILABLE FOR INFORMATION TO BIDDER ARE NOT TO BE USED FOR OTHER PURPOSES, AND ARE TO BE RETURNED UPON REQUEST OF THE FORWARDING CONTRACTOR.

P THIS DRAWING PRODUCED ON PRO-ENGINEER

THIS DOCUMENT CONTROLLED BY CHANGE CONTROL SYSTEM 3
ENGINEERING PROCEDURE SNS-ENG-G001