NEXT ASS'Y:

FINAL ASS'Y:

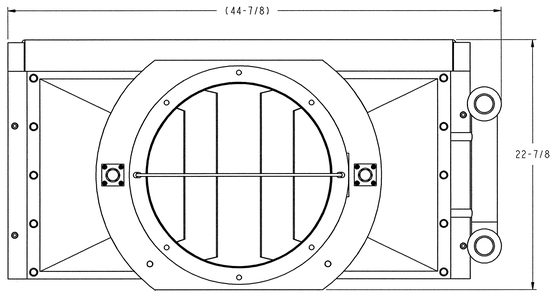


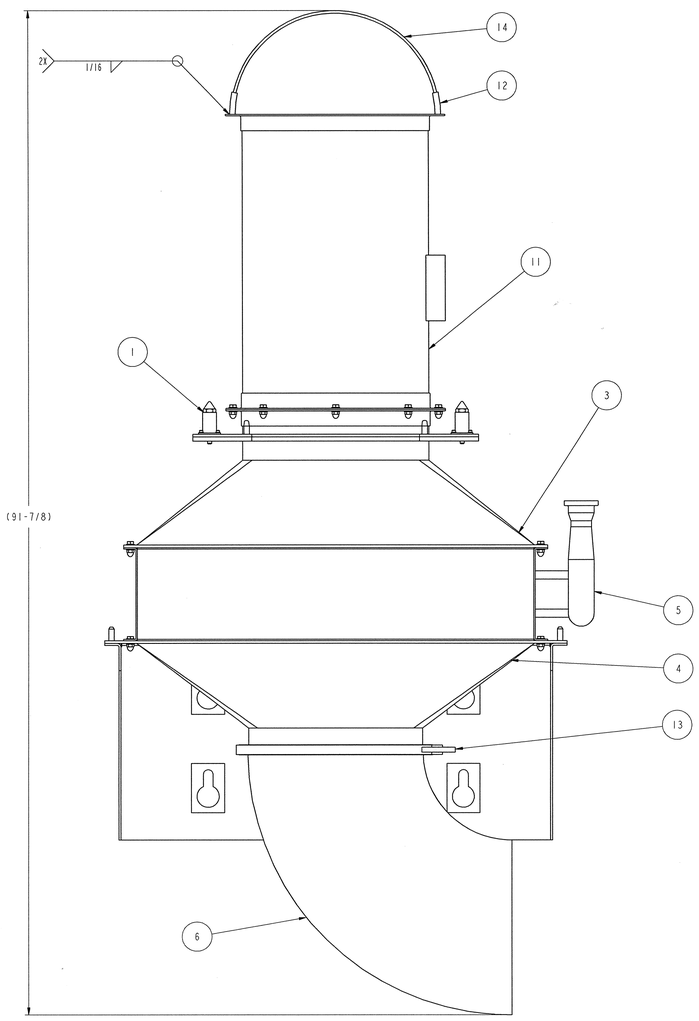


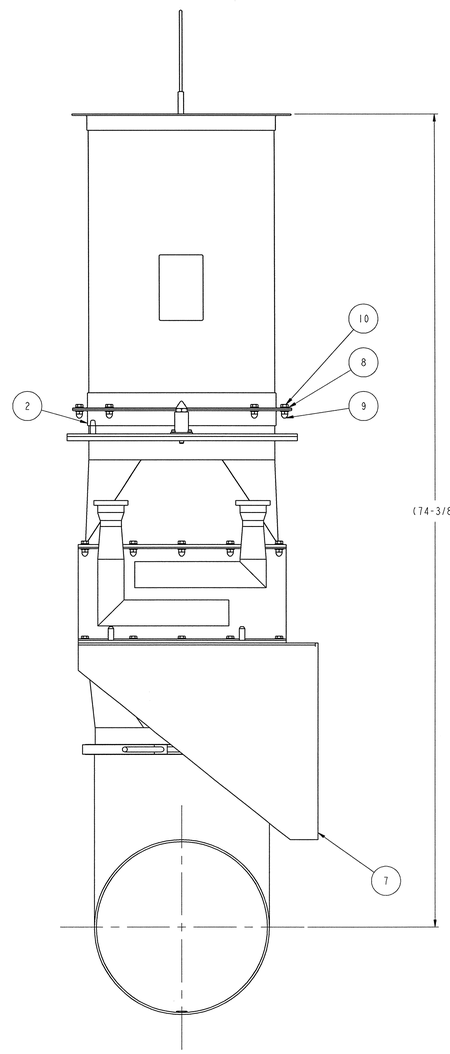


## PARTS LIST

| PART NO. | DRAWING NO. | DESCRIPTION | QTY |
|---|---|---|---|
| 1 | J3.17.30 | REMOTE HANDLED FASTENER ASSEMBLY | 2 |
| 2 | J3.21.31 | HOT CELL COOLER TUBULAR FAN MOUNTING FLANGE WELDMENT | 1 |
| 3 | J3.21.32 | HOT CELL COOLER INLET WELDMENT | 1 |
| 4 | J3.21.33 | HOT CELL COOLER OUTLET WELDMENT | 1 |
| 5 | J3.21.34 | HX-3002 COMPONENT DRAWING | 1 |
| 6 | J3.21.35 | HOT CELL COOLER OUTLET ELBOW WELDMENT | 1 |
| 7 | J3.21.36 | HOT CELL COOLER SUPPORT WELDMENT | 1 |
| 8 | | WASHER, PLAIN, TYPE B, NARROW, 3/8, AISI 300 SERIES SST | 56 |
| 9 | | ACORN NUT, HIGH CROWN, 3/8-16 UNC, AISI 300 SERIES SST | 28 |
| 10 | | SCREW, HEX, 3/8-16 UNC X 3/4 LG., ASTM F593 GROUP ICW | 28 |
| 11 | | AXIAL FAN, PER DATA SHEET BL-3002 | 1 |
| 12 | | STOP SLEEVE FOR 3/16 DIA. WIRE ROPE, 304 SST | 2 |
| 13 | | V-BAND RETAINER, 301 SST, CLAMPCO P/N: V0115200N-1813-T | 1 |
| 14 | | WIRE ROPE, 3/16 DIA., 7 X 19 STRAND, 304 SST | 1 |

**NOTES:**

1. THIS COMPONENT IS SUBJECT TO THE REQUIREMENTS SET FORTH IN SECTION 15065.

2. COMPONENT TAG NUMBERS: CF-TA-01, CF-TA-01A, AND CF-TA-01B.

SCALE: 3/16

J3-21-30

108030700-J8E-8700-A039

Knight/Jacobs Joint Venture
701 Scarboro Road, MS 8253
Oak Ridge, TN 37830
865-241-9433
fax865-241-3400

MERRICK Engineers & Architects

UT-BATTELLE — Oak Ridge National Laboratory, managed by UT-Battelle, LLC, for the U.S. Dept. of Energy under contract DE-AC05-00OR22725

PROJECT NAME: SPALLATION NEUTRON SOURCE

TARGET BUILDING
HOT CELL COOLER
ASSEMBLY

| 1 | 48 | 49 | 50 | PLANT | BLDG | FL | SH. | OF | TYPE | CLASS |
|---|---|---|---|---|---|---|---|---|---|---|
| 3 | J | X | X | 8 | 8700 | | 1 | 1 | G | U |
| 51 | | 52 | | 53 | WBS | | | | | REV |
| NC | | NA | | IN | 1.8.3.7 | J3.21.30 | | | | 0 |

| REV | CHANGE TYPE | CHANGE CONTROL SYSTEM | CHANGE REQUEST NUMBER | DESCRIPTION | DSN | CHK | DEPT | DATE | PE | DATE | PJ | DATE | REQ | DATE | UTB | DATE | RPE | RPE NO | DATE | ST | CV | EC | EE | EM | IE | M | PD | SE | AR |
|---|---|---|---|---|---|---|---|---|---|---|---|---|---|---|---|---|---|---|---|---|---|---|---|---|---|---|---|---|---|
| 0 | | | | CERTIFIED FOR CONSTRUCTION - 10/26/01 | PCD | TBO | | | | 11/6/01 | RAD | 11/26/01 | | | | 11/27/01 | TBO | 106873 | 10/26/01 | | | | | | | | | | |

REVISION OR ISSUE PURPOSE — REVISION APPROVALS — SQUAD CHECK

RPE

| | | |
|---|---|---|
| DSN | P. Pond | 10/25/01 |
| DRW | P. Pond | 10/25/01 |
| CHK | T. Fox | 10/25/01 |
| DEPT | | |
| PE | R. Hansen | 11/15/01 |
| PJ | R.A. Dean | 11/26/01 |
| REQ | | |
| UTB | M. Stevens | 11/27/01 |

REV. 0 DATE 10/25/01

DRAWING APPROVALS

NO REPRESENTATION OR WARRANTY, EXPRESSED OR IMPLIED, IS MADE AS TO THE ACCURACY, COMPLETENESS OR USEFULNESS OF THE INFORMATION OR STATEMENTS CONTAINED IN THESE DRAWINGS, OR THAT THE USE OR DISCLOSURE OF ANY INFORMATION, APPARATUS, METHOD OR PROCESS DISCLOSED IN THESE DRAWINGS MAY NOT INFRINGE PRIVATE RIGHTS OF OTHERS. NO LIABILITY IS ASSUMED WITH RESPECT TO THE USE OF, OR FOR DAMAGES RESULTING FROM THE USE OF, ANY INFORMATION, APPARATUS, METHOD OR PROCESS DISCLOSED IN THESE DRAWINGS. DRAWINGS MADE AVAILABLE FOR INFORMATION TO BIDDER ARE NOT TO BE USED FOR OTHER PURPOSES, AND ARE TO BE RETURNED UPON REQUEST OF THE FORWARDING CONTRACTOR.

P THIS DRAWING PRODUCED ON PRO-ENGINEER

THIS DOCUMENT CONTROLLED BY
CHANGE CONTROL SYSTEM 3
ENGINEERING PROCEDURE SNS-ENG-G001