GENERAL NOTES:
1) DIMENSIONS AND SYMBOLOGY ARE AMERICAN NATIONAL STANDARD UNLESS OTHERWISE SPECIFIED.
2) ROUGHNESS AVERAGE EQUALS 125 MICROINCHES UNLESS OTHERWISE SPECIFIED.
3) DIMENSIONS AND TOLERANCES ARE IN INCHES.
4) BREAK ALL SHARP EDGES.
5) TOLERANCES:
DECIMALS: .X = ±.060
.XX = ±.030
.XXX = ±.010
FRACTIONS: ±1/16
ANGULAR: ±1°

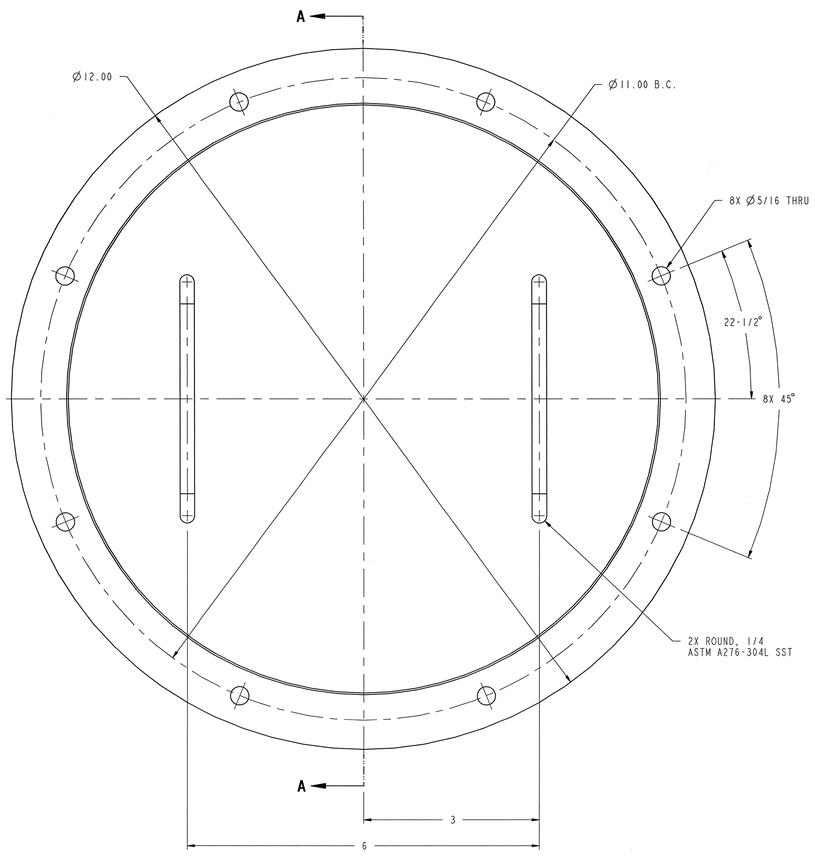


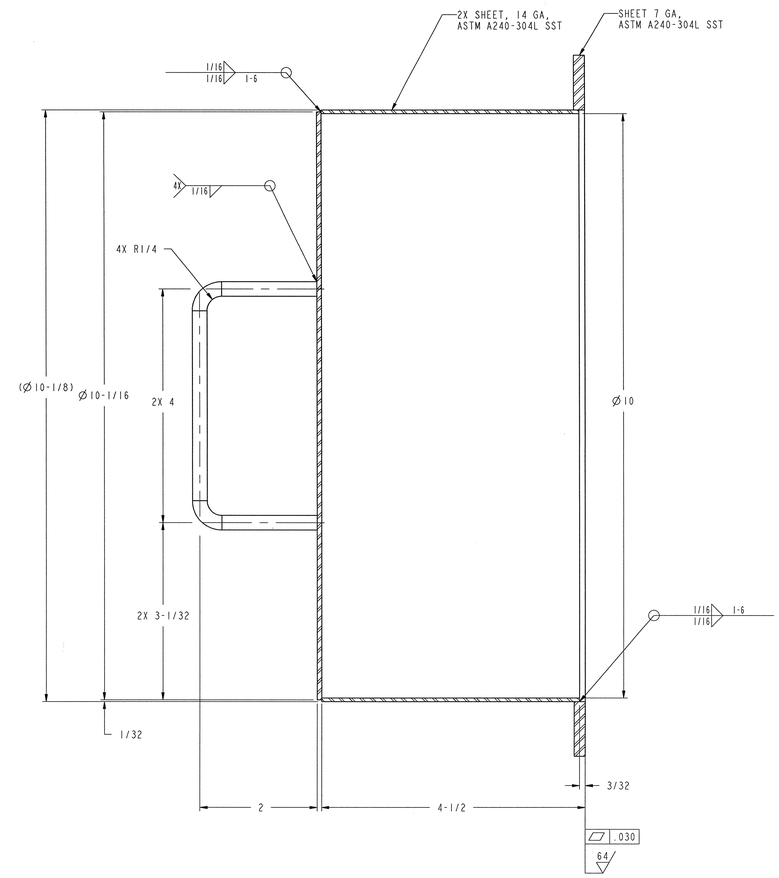


SECTION A-A

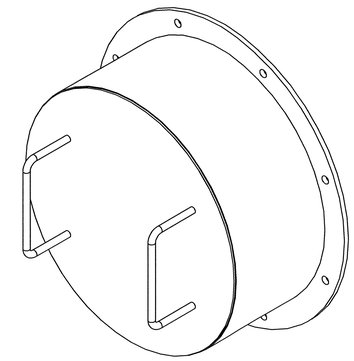

NOTES:

1. THIS COMPONENT IS SUBJECT TO THE REQUIREMENTS SET FORTH IN SECTION 15065.

SCALE: 1/1

108030700-J8E-8700-A144


Knight/Jacobs Joint Venture
701 Scarboro Road, MS 8253
Oak Ridge, TN 37830
865-241-9433
fax865-241-3400


MERRICK Engineers & Architects

UT-BATTELLE
Oak Ridge National Laboratory, managed by UT-Battelle, LLC, for the U.S. Dept. of Energy under contract DE-AC05-00OR22725

PROJECT NAME:
SPALLATION NEUTRON SOURCE

TARGET BUILDING
10 INCH
BAG RING COVER

| 1 | 48 | 49 | 50 | PLANT | BLDG | FL | SH. | OF | TYPE | CLASS |
|---|---|---|---|---|---|---|---|---|---|---|
| 3 | J | X | X | 8 | 8700 | | 1 | 1 | G | U |

| 51 | 52 | 53 | WBS | | REV |
|---|---|---|---|---|---|
| NC | NA | IN | 1.8.3.7 | J3.20.38 | 0 |

| REV | CHANGE TYPE | CHANGE CONTROL SYSTEM | CHANGE CONTROL SUBSET | DESCRIPTION | DSN | CHK | DEPT | DATE | PE | DATE | PJ | DATE | REQ | DATE | UTB | DATE | RPE | RPE NO | DATE | ST | CV | EC | EE | EM | IE | M | PD | SE | AR |
|---|---|---|---|---|---|---|---|---|---|---|---|---|---|---|---|---|---|---|---|---|---|---|---|---|---|---|---|---|---|
| 0 | - | | | CERTIFIED FOR CONSTRUCTION - 10/26/01 | PCD | TBO | - | | [signature] | 11/13/01 | RPD | 11/12/01 | | | [signature] | 11/12/01 | TBO | 106873 | 10/26/01 | - | | | | | | | | | |

REVISION OR ISSUE PURPOSE — REVISION APPROVALS — SQUAD CHECK

RPE
TORIE BUAROY OSEN
REGISTERED ENGINEER
STATE OF TENNESSEE
COMMERCE
NO. 106873

| | | |
|---|---|---|
| DSN | [signature] | 10/23/01 |
| DRW | [signature] | 10/23/01 |
| CHK | [signature] | 10/23/01 |
| DEPT | | |
| PE | [signature] | 11/14/01 |
| PJ | R A Dean | 11/12/01 |
| REQ | | |
| UTB | [signature] | 11/12/01 |

REV. 0 DATE 10/23/01
DRAWING APPROVALS


NO REPRESENTATION OR WARRANTY, EXPRESSED OR IMPLIED, IS MADE AS TO THE ACCURACY, COMPLETENESS OR USEFULNESS OF THE INFORMATION OR STATEMENTS CONTAINED IN THESE DRAWINGS, OR THAT THE USE OR DISCLOSURE OF ANY INFORMATION, APPARATUS, METHOD OR PROCESS DISCLOSED IN THESE DRAWINGS MAY NOT INFRINGE PRIVATE RIGHTS OF OTHERS. NO LIABILITY IS ASSUMED WITH RESPECT TO THE USE OF, OR FOR DAMAGES RESULTING FROM THE USE OF, ANY INFORMATION, APPARATUS, METHOD OR PROCESS DISCLOSED IN THESE DRAWINGS. DRAWINGS MADE AVAILABLE FOR INFORMATION TO BIDDER ARE NOT TO BE USED FOR OTHER PURPOSES, AND ARE TO BE RETURNED UPON REQUEST OF THE FORWARDING CONTRACTOR.


P THIS DRAWING PRODUCED ON PRO-ENGINEER

THIS DOCUMENT CONTROLLED BY CHANGE CONTROL SYSTEM 3
ENGINEERING PROCEDURE SNS-ENG-G001

J3-20-38