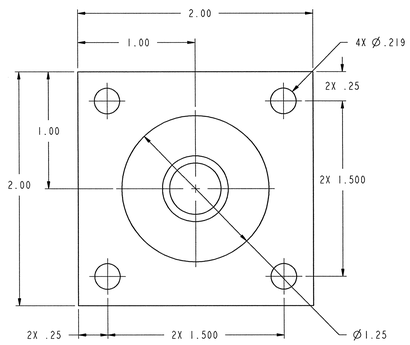

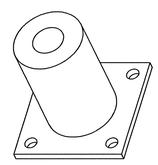

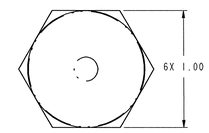

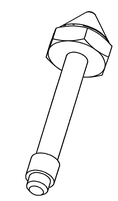

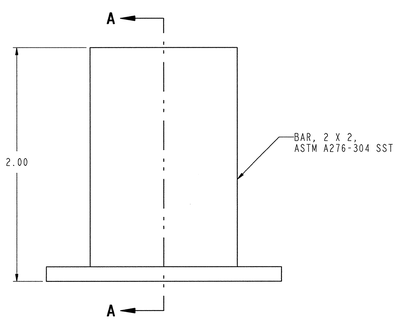

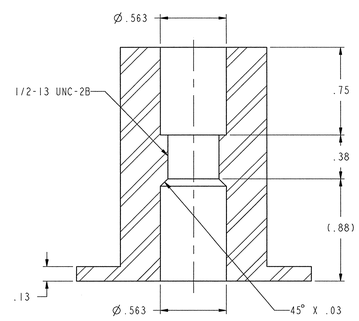

SECTION A-A

REMOTE HANDLED FASTENER HOUSING
SCALE 2/1

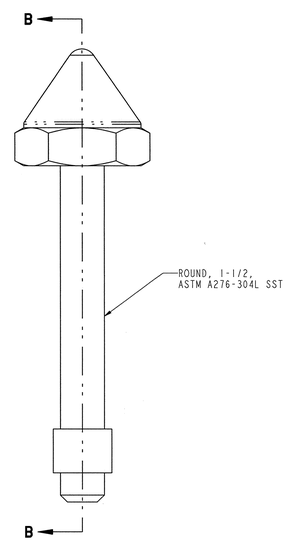

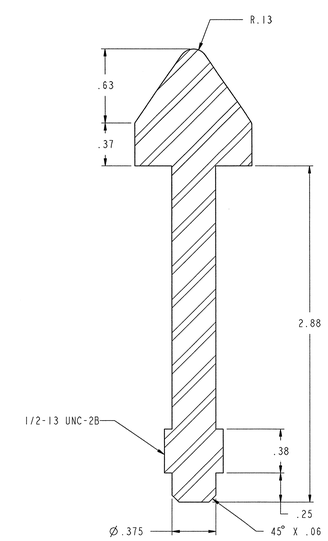

SECTION B-B

REMOTE HANDLED FASTENER CONE HEAD BOLT
SCALE 2/1

NOTES:

1. THESE COMPONENTS ARE SUBJECT TO THE REQUIREMENTS SET FORTH IN SECTION 15065.

SCALE: 2/1

J3-17-31

108030700-J8E-8700-A141

Knight/Jacobs Joint Venture
701 Scarboro Road, MS 8253
Oak Ridge, TN 37830
865-241-9433
fax 865-241-3400

MERRICK Engineers & Architects

UT-BATTELLE
Oak Ridge National Laboratory, managed by UT-Battelle, LLC, for the U.S. Dept. of Energy under contract DE-AC05-00OR22725

PROJECT NAME:
SPALLATION NEUTRON SOURCE

TARGET BUILDING
REMOTE HANDLED FASTENER
DETAILS

1	48	49	50	PLANT	BLDG	FL	SH.	OF	TYPE	CLASS
3	J	X	X	8	8700		1	1	G	U

51	52	53	WBS		REV
NC	NA	IN	1.8.3.7	J3.17.31	0

REV	CHANGE TYPE	CHANGE SYSTEM	CHANGE NUMBER	DESCRIPTION	DSN	CHK	DEPT	DATE	PE	DATE	PJ	DATE	REQ	DATE	UTB	DATE	RPE	RPE NO	DATE	ST	CV	EC	EE	EM	IE	M	PD	SE	AR
0			-	CERTIFIED FOR CONSTRUCTION - 10/26/01	NHL	TBO			PJD	11/3/01	RAP	11/12/01			[signature]	11/12/01	TBO	106873	10/26/01											

REVISION OR ISSUE PURPOSE — REVISION APPROVALS — SQUAD CHECK

RPE
TORIE BUAROY OSEN
REGISTERED ENGINEER
AGRICULTURE
COMMERCE
NO. 00106873
STATE OF TENNESSEE
REV. 0 DATE 10/23/01

DSN	[signature]	10/23/01
DRW	[signature]	10/23/01
CHK	[signature]	10/23/01
DEPT		
PE	[signature]	11/8/01
PJ	RA Dean	11/12/01
REQ		
UTB	[signature]	11/12/01

DRAWING APPROVALS

NO REPRESENTATION OR WARRANTY, EXPRESSED OR IMPLIED, IS MADE AS TO THE ACCURACY, COMPLETENESS OR USEFULNESS OF THE INFORMATION OR STATEMENTS CONTAINED IN THESE DRAWINGS, OR THAT THE USE OR DISCLOSURE OF ANY INFORMATION, APPARATUS, METHOD OR PROCESS DISCLOSED IN THESE DRAWINGS MAY NOT INFRINGE PRIVATE RIGHTS OF OTHERS. NO LIABILITY IS ASSUMED WITH RESPECT TO THE USE OF, OR FOR DAMAGES RESULTING FROM THE USE OF, ANY INFORMATION, APPARATUS, METHOD OR PROCESS DISCLOSED IN THESE DRAWINGS. DRAWINGS MADE AVAILABLE FOR INFORMATION TO BIDDER ARE NOT TO BE USED FOR OTHER PURPOSES, AND ARE TO BE RETURNED UPON REQUEST OF THE FORWARDING CONTRACTOR.

P THIS DRAWING PRODUCED ON PRO-ENGINEER

THIS DOCUMENT CONTROLLED BY CHANGE CONTROL SYSTEM 3
ENGINEERING PROCEDURE SNS-ENG-G001