GENERAL NOTES:
1) DIMENSIONS AND SYMBOLOGY ARE AMERICAN NATIONAL STANDARD UNLESS OTHERWISE SPECIFIED.
2) ROUGHNESS AVERAGE EQUALS 125 MICROINCHES UNLESS OTHERWISE SPECIFIED.
3) DIMENSIONS AND TOLERANCES ARE IN INCHES.
4) BREAK ALL SHARP EDGES.
5) TOLERANCES:
DECIMALS: .X = ±.060
.XX = ±.030
.XXX = ±.010
FRACTIONS: ±1/16
ANGULAR: ±1°

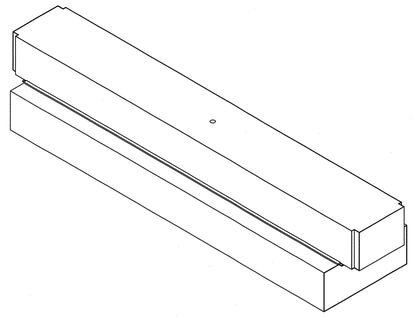

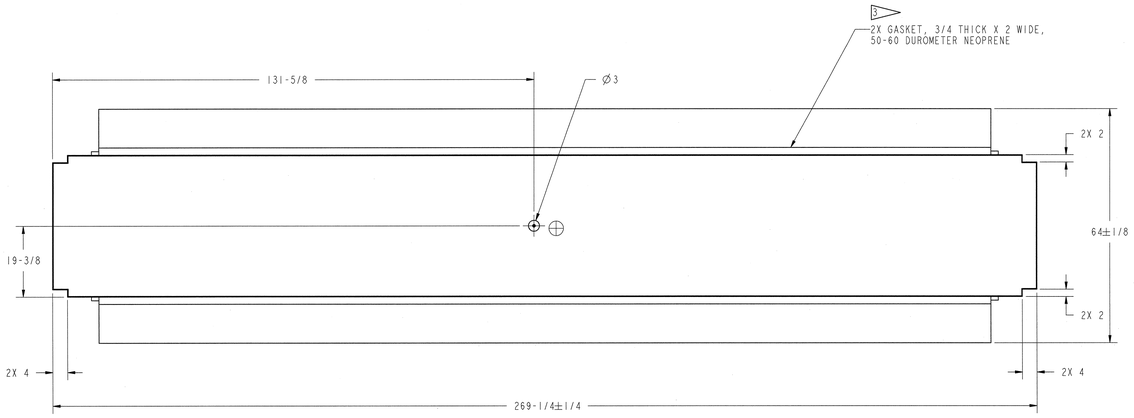

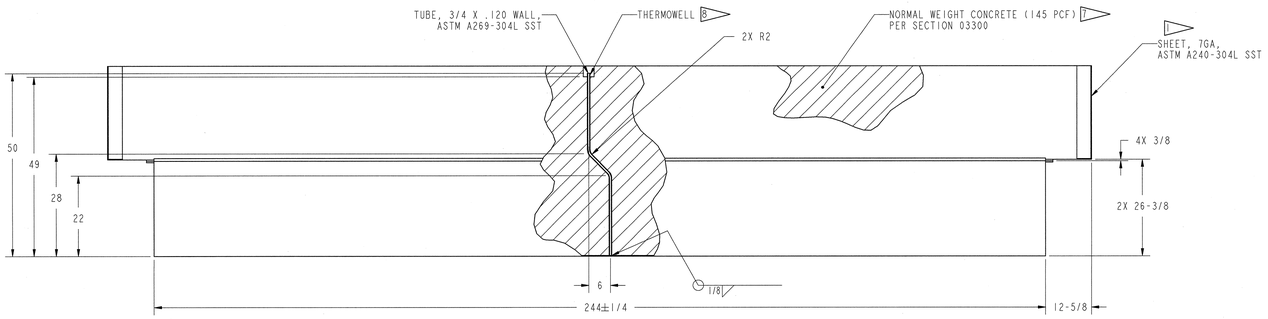

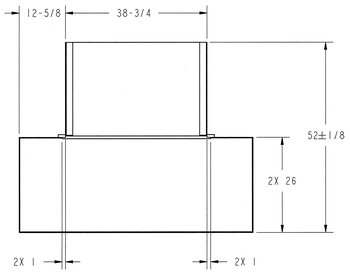

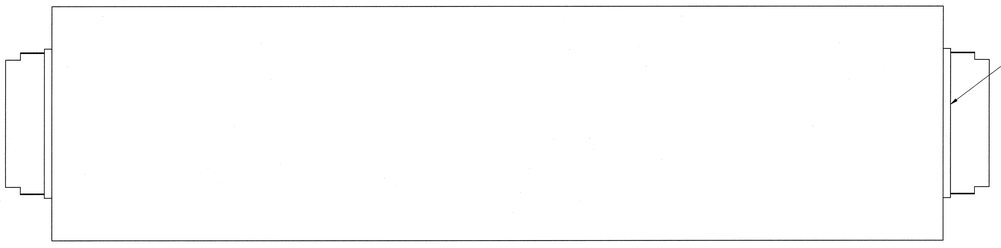

NOTES:

1. THE FABRICATION OF THE 7GA SST LINER IS SUBJECT TO THE REQUIREMENTS SET FORTH IN SECTION 15065. THE LINER SHALL CONTINUOUSLY FORM THE SIDES AND BOTTOM SURFACES OF THE CONCRETE. THE TOP SURFACE DOES NOT NEED TO BE LINED. IN ADDITION, CONTINOUSLY WELD ALL LINER PANELS USING FULL PENETRATION BUTT, GROOVE AND/OR FILLET WELDS.
2. USE A SINGLE ROW OF 1/4" DIAMETER BY 4-1/8" LONG 316L SST NELSON H4L HEADED CONCRETE ANCHORS AROUND THE PERIMETER OF THE TEE. SPACE ANCHORS ON NO MORE THAN 12" CENTERS. LOCATE ANCHORS 12" DOWN FROM THE TOP OF THE TEE.
3. GASKETS SHALL BE ADHERED TO THE SST LINER USING LOCTITE DURABOND E-40FL EPOXY.
4. EXPOSED CONCRETE SHALL BE PAINTED IN ACCORDANCE WITH SECTION 09960.
5. SEE DRAWING S4.30.31 FOR STRUCTRUAL REINFORCEMENT DETAILS, INCLUDING LIFTING FEATURES, REBAR SIZES AND LOCATIONS.
6. ⊕ DENOTES SAFETY-SIGNIFICANT COMPONENT (SSC) SUBSTITUTIONS FOR SSC COMPONENTS MAY NOT BE MADE WITHOUT THE PROPER AUTHORITY.
7. FABRICATE FIVE INVERTED TEES USING NORMAL WEIGHT CONCRETE (145 PCF) PER SECTION 03300.
8. ONLY ONE OF THE FIVE INVERTED TEES REQUIRE THE EMBEDDED THERMOWELL TUBE. FABRICATOR SHALL PROVIDE 3" OD X 1" ID X 3" DEEP STEEL CAP TO COVER THE HOLE IN THE CONCRETE AROUND THE THERMOWELL TUBE.
9. COMPONENT WEIGHT: 56300 LBS.
10. ALL INVERTED TEES SHALL HAVE A PAINTED OR EMBOSSED LABEL INDETIFYING WEIGHT.

SCALE: 1/16

J3-11-37

108030700-J8E-8700-A022

Knight/Jacobs Joint Venture
701 Scarboro Road, MS 8253
Oak Ridge, TN 37830
865-241-9433
fax 865-241-3400

MERRICK Engineers & Architects

UT-BATTELLE — Oak Ridge National Laboratory, managed by UT-Battelle, LLC, for the U.S. Dept. of Energy under contract DE-AC05-00OR22725

PROJECT NAME: SPALLATION NEUTRON SOURCE

TARGET BUILDING
HOT CELL ROOF TEE
INVERTED

I	KB	49	50	PLANT	BLDG	FL	SH.	OF	TYPE	CLASS
3	J	X	X	8	8700		1	1	G	U

51	52	53	WBS	REV
NC	NA	IN	1.8.3.7	J3.11.37	0

| | | |