GENERAL NOTES:
1) DIMENSIONS AND SYMBOLOGY ARE AMERICAN NATIONAL STANDARD UNLESS OTHERWISE SPECIFIED.
2) ROUGHNESS AVERAGE EQUALS 125 MICROINCHES UNLESS OTHERWISE SPECIFIED.
3) DIMENSIONS AND TOLERANCES ARE IN INCHES.
4) BREAK ALL SHARP EDGES.
5) TOLERANCES:
DECIMALS: .X = ±.060
.XX = ±.030
.XXX = ±.010
FRACTIONS: ±1/16
ANGULAR: ±1°

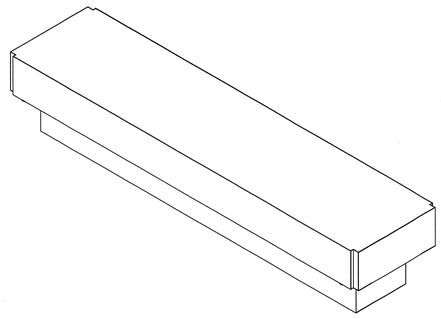

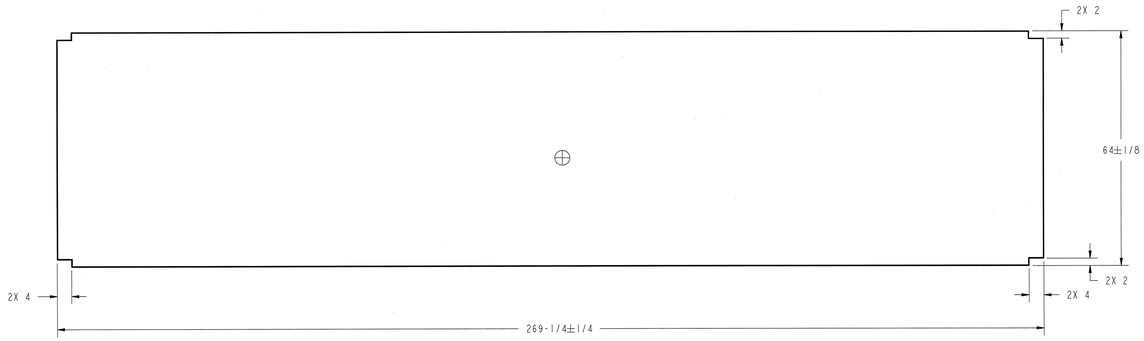

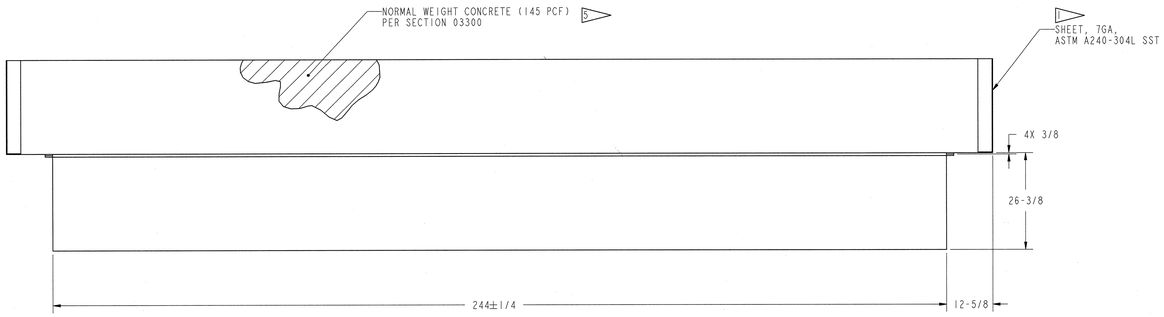

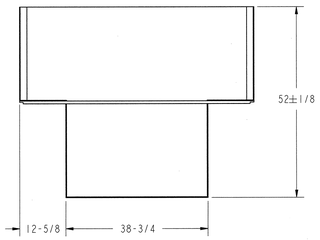

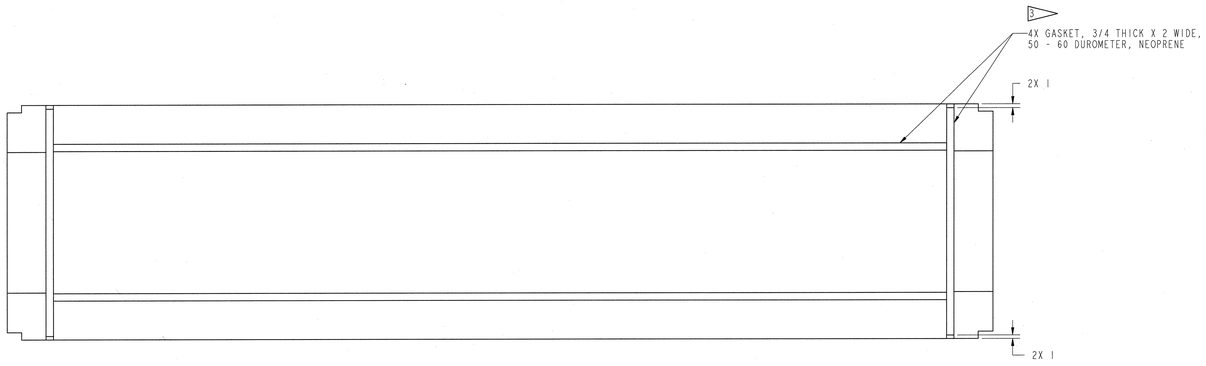

NOTES:

1. THE FABRICATION OF THE 7GA SST LINER IS SUBJECT TO THE REQUIREMENTS SET FORTH IN SECTION 15065. THE LINER SHALL CONTINUOUSLY FORM THE SIDES AND BOTTOM SURFACES OF THE CONCRETE. THE TOP SURFACE DOES NOT NEED TO BE LINED. IN ADDITION, CONTINOUSLY WELD ALL LINER PANELS USING FULL PENETRATION BUTT, GROOVE AND/OR FILLET WELDS.
2. USE A SINGLE ROW OF 1/4" DIAMETER BY 4-1/8" LONG 316L SST NELSON H4L HEADED CONCRETE ANCHORS AROUND THE PERIMETER OF THE TEE. SPACE ANCHORS ON NO MORE THAN 12" CENTERS. LOCATE ANCHORS 12" DOWN FROM THE TOP OF THE TEE.
3. GASKETS SHALL BE ADHERED TO THE SST LINER USING LOCTITE DURABOND E-40FL EPOXY.
4. EXPOSED CONCRETE SHALL BE PAINTED IN ACCORDANCE WITH SECTION 09960.
5. FABRICATE EIGHT UPRIGHT TEE'S USING NORMAL WEIGHT CONCRETE (145 PCF) AND ONE USING HEAVY WEIGHT CONCRETE (245 PCF) PER SECTION 03300.
6. SEE DRAWING S4.30.31 FOR STRUCTURAL REINFORCEMENT DETAILS, INCLUDING LIFTING FEATURES, REBAR SIZES AND LOCATIONS.
7. ⊕ DENOTES SAFETY-SIGNIFICANT COMPONENT (SSC) SUBSTITUTIONS FOR SSC COMPONENTS MAY NOT BE MADE WITHOUT THE PROPER AUTHORITY.
8. COMPONENT WEIGHT: 98059 LBS (HWC)
COMPONENT WEIGHT: 57205 LBS (NWC)
9. ALL TEES SHALL HAVE A PAINTED OR EMBOSSED LABEL IDENTIFYING WEIGHT.
10. HIGH DENSITY CONCRETE TEE SHALL HAVE A PAINTED OR EMBOSSED LABEL IDENTIFYING POSITION IN CEILING.

SCALE: 1/16

J3-11-36

108030700-J8E-8700-A021

Knight/Jacobs Joint Venture
701 Scarboro Road, MS 8253
Oak Ridge, TN 37830
865-241-9433
fax 865-241-3400

MERRICK Engineers & Architects

UT-BATTELLE — Oak Ridge National Laboratory, managed by UT-Battelle, LLC, for the U.S. Dept. of Energy under contract DE-AC05-00OR22725

REV	CHANGE	CHANGE SYSTEM	CHANGE NUMBER	DESCRIPTION	PCD	TBO			PE	DATE	PJ	DATE	REQ	DATE	UTB	DATE	RPE	RPE NO	DATE		ST	CV	EC	EE	EM	IE	M	PD	SE	AR
0				CERTIFIED FOR CONSTRUCTION - 10/26/01					RPD	11/15/01	RAD	11/16/01			OMT	11/14/01	TBO	106873	11/13/01											
REV	CHANGE	CHANGE SYSTEM	CHANGE NUMBER	DESCRIPTION	DSN	CHK	DEPT	DATE	PE	DATE	PJ	DATE	REQ	DATE	UTB	DATE	RPE	RPE NO	DATE		ST	CV	EC	EE	EM	IE	M	PD	SE	AR

REVISION OR ISSUE PURPOSE — REVISION APPROVALS — SQUAD CHECK

RPE

TORIE GUAROT OWEN — REGISTERED PROFESSIONAL ENGINEER — STATE OF TENNESSEE — 00106873

REV. 0 DATE 11/16/01

DSN	P. Dean	11/12/01
DRW	P. Dean	11/12/01
CHK	T. Owen	11/14/01
DEPT		
PE	R.D. Dean	11/15/01
PJ	R.A. Dean	11/16/01
REQ		
UTB	O.M. Lawson	11/16/01

DRAWING APPROVALS

PROJECT NAME:
SPALLATION NEUTRON SOURCE
TARGET BUILDING
HOT CELL ROOF TEE
UPRIGHT

1	48	49	50	PLANT	BLDG	FL	SH.	OF	TYPE	CLASS
3	J	X	X	8	8700		1	1	G	U

51	52	53	WBS	REV
NC	NA	IN	1.8.3.7	J3.11.36	0

NO REPRESENTATION OR WARRANTY, EXPRESSED OR IMPLIED, IS MADE AS TO THE ACCURACY, COMPLETENESS OR USEFULNESS OF THE INFORMATION OR STATEMENTS CONTAINED IN THESE DRAWINGS, OR THAT THE USE OR DISCLOSURE OF ANY INFORMATION, APPARATUS, METHOD OR PROCESS DISCLOSED IN THESE DRAWINGS MAY NOT INFRINGE PRIVATE RIGHTS OF OTHERS. NO LIABILITY IS ASSUMED WITH RESPECT TO THE USE OF, OR FOR DAMAGES RESULTING FROM THE USE OF, ANY INFORMATION, APPARATUS, METHOD OR PROCESS DISCLOSED IN THESE DRAWINGS. DRAWINGS MADE AVAILABLE FOR INFORMATION TO BIDDER ARE NOT TO BE USED FOR OTHER PURPOSES, AND ARE TO BE RETURNED UPON REQUEST OF THE FORWARDING CONTRACTOR.

P THIS DRAWING PRODUCED ON PRO-ENGINEER

THIS DOCUMENT CONTROLLED BY
CHANGE CONTROL SYSTEM 3
ENGINEERING PROCEDURE SNS-ENG-G001